This book is published by Tucson Electric Power Company (TEP) and UniSource Energy Services (Santa Cruz County) as a reference and a guide to its regulations and practices for the connection and supply of electric service. The information and requirements, as referred to in TEP's and UES's rate tariffs and schedules and also mentioned in this book, set forth the general conditions under which electric service will be supplied. The information contained in this book is intended primarily for architects, engineers, contractors, and individual electric service applicants engaged in the planning and construction of buildings or in the installation and replacement of equipment that is to be connected to and served from TEP and UniSource Energy Services (Santa Cruz County) electric distribution system.

The standards for materials and construction referred to in this book are necessary to safeguard all electric service applicants, to provide for the maximum utilization of electric service, and are the minimum under which TEP and UES will supply electric service. In the event a condition arises that is not specifically covered in this book, the Service Provider's Design Department should be consulted to determine all applicable requirements.

PROPRIETARY MATERIAL

This material is based on assumptions and criteria which may not be valid outside the Tucson Electric Power Company and UniSource Energy Services (Santa Cruz County) electric system. The material in this book should not be reproduced for the use of other utilities as Electrical Service Requirements.

Copyright © 2018
Tucson Electric Power Company
UniSource Energy Services (Santa Cruz County)

TEP Tucson Electric Power

UniSourceEnergy SERVICES SANTA CRUZ COUNTY

ADDITIONS & REVISIONS

As materials and practices within the utility industry are constantly changing, this book is designed to allow revisions throughout the year. Updates will be posted on The Company's web site 30 days prior to the effective date whenever possible. However, changes due to governmental code and legal requirements may be effective immediately without any prior notification. Any problems that occur as a result of using out of date standards will be the sole responsibility of the book holder and will not be corrected at TEP's and UES's expense.

During the year, updates to the Service Requirements book will be posted on the Internet. Refer to this page at https://www.tep.com/electric-service-requirements/ to verify any recent updates to the Service Requirements book. This will assure you are using the latest revision.

Throughout the year, Additions & Revisions for 2018

FEBRUARY UPDATES:
SR-422, page 2

MARCH UPDATES:
SR-702, pages 1-12
SR-704, pages 1-2 (removed)
SR-705, pages 1 (removed)

ADDITIONS & REVISIONS TO THE 2018 ELECTRICAL SERVICE REQUIREMENTS PRINTING

Please go to the page shown to see updates to this publication.

Additions & Revisions for 2017

Proprietary Material
Addition & Revisions
Section 100 TOC
Section 200 TOC
Section 400 TOC
Section 600 TOC
SEction 700 TOC
Section 800 TOC
SR-1.02, (removed)
SR-1.03, (removed)
SR-100
SR-101, page 1-2
SR-102, page 1-2
SR-1.20 (removed)
SR-1.21 (removed)
SR-1.22, page 1-10 (removed)
SR-1.23, page 1-6 (removed)
SR-240, page 1-4
SR-205, page 1
SR-207
SR-208, page 1
SR-209, page 1
SR-210
SR-212
SR-215
SR-218
SR-220, page 1
SR-221 (removed)
SR-225, page 1-9
SR-230
SR-232
SR-233, page 1
SR-234
SR-235
SR-240, page 1-4
SR-242, page 1
SR-305, page 1-5
SR-308, page 1-2
SR-309, Page 1-2
SR-410, page 1-10
SR-422, page 1-5
SR-453, pages 1-13 (removed)
SR-510, page 1-2
SR-600
SR-601, page 1-2
SR-602
SR-603
SR-604
SR-605
SR-606
SR-607
SR-608
SR-609
SR-610
SR-701, page 1-2 (formerly SR-1.20-1.21)
SR-702, page 1-10 (formerly SR-1.22)
SR-703, page 1-6 (formerly SR-1.23)
SR-704, page 1-2
SR-705
SR-805 (formerly SR-221)
Legend, page 1-3

* Indicates a new or change to an item that may affect suppliers

Revisions contained in this book are indicated by an ◢ or ▌,

and when delta 2 is used, the delta number will indicate the latest drawing revision.

TEP Tucson Electric Power

UniSourceEnergy SERVICES SANTA CRUZ COUNTY

Comment and ESRB Change Form

This form may be utilized to communicate any recommended changes or any comments regarding the information contained within this book or how the information is organized. Please complete the form in sufficient detail to communicate clearly any proposed changes and please be sure to include the name, address, and telephone number of a person to contact should additional information be required.

Date: _____

Requester Name: _____

Telephone Number: _____

Business Name: _____

E-mail address: _____

Address: _____

_____

_____

Comments: _____

_____

_____

_____

_____

_____

_____

_____

Please Mail to:
Tucson Electric Power Company
Attn: Safety, Training, and Standards – Eileen Dickerson OH107
PO. Box 711
Tucson, AZ 85702

T.E.P. Use Only

Date received: _____ ESRB Updated

Reviewed by: _____ Yes ☐ _____

Date forwarded to ESRC: _____ No ☐

Reviewed by: _____

Comments: _____

_____

_____

Action: ☐ Approved ☐ Under Study ☐ Not Approved

Does the Committee action impact the Public? ☐ Yes ☐ No

Will a Public notification letter need to be sent out? ☐ Yes ☐ No ☐ Sent

Comments: _____

_____

Signed by: _____ Date: _____

TABLE OF CONTENTS

TITLE	SECTION
General Information, Application for Service, Customer Information, Customer Installation and Miscellaneous Requirements	100
Line Extensions/Civil	200
Services	300
Metering Installations	400
Short Circuit Protection	500
Grounding & Bonding	600
Customer Technologies	700
Telecommunication & CATV Attachments	800
GIS Drawing Legend	LEGEND

100 SECTION
GENERAL INFORMATION

TITLE	SR-No.
Title Block and Logos	100
TEP Contact Information (pg. 1) UES Contact Information (pg. 2)	101
Definitions (pg. 1-2)	102
Application for Services:	
Type of Service & Limitations	1.04 - 1.05
Preliminary Notification Obtaining Information Removal of Facilities Service Scheduling	1.06
Government Contracts	1.07
Residential/Commercial New Construction Application	1.13
Service Removal Request	1.13A
Answers to Commonly Asked Questions	1.14
Outline for Project Completion:	
Residential	1.15
Commercial	1.16
Customer Information:	
Codes and Regulations Customer Installations Access to Premises Employee Identification	1.17
Employee Compensation Tampering Protection of TEP Property Design of Customer's Equipment	1.18
Interruptions Defaults One Call/Access	1.19
Un-metered Energy Resale of Energy Attachments to TEP Facilities Access to Pad Mounted Equipment Trimming Trees	1.24

100 SECTION
GENERAL INFORMATION

TITLE	SR-No.
Miscellaneous Requirements:	
Right-of-Way	
Prior to Excavation	
High Voltage Power Lines and Safety Restrictions	
Damage to TEP Facilities	
Grade Changes	
Relocation of Electrical Facilities	
Power Outage Request	1.25
Requirements for Easements:	
Legal Description	1.26

EXPLANATION OF COMPANY LOGOS AND TITLE BAR

There are two company logos utilized throughout the Electrical Service Requirements Book (ESRB) that determine whether the specific Service Requirements (SR) is applicable in the Tucson Electric Power (TEP) and/or the Unisource Energy Services (UES) Santa Cruz Service Territory.

An SR with both logos is standardized to apply to projects in the TEP and UES Santa Cruz Service Territories (see Figure 1). If an SR has one logo the requirement is specific to the company indicated (see Figure 2).

Any questions as to whether the requirement is applicable to the scope of work on a project should be directed to Design Services for the company providing the service.

Figure 1

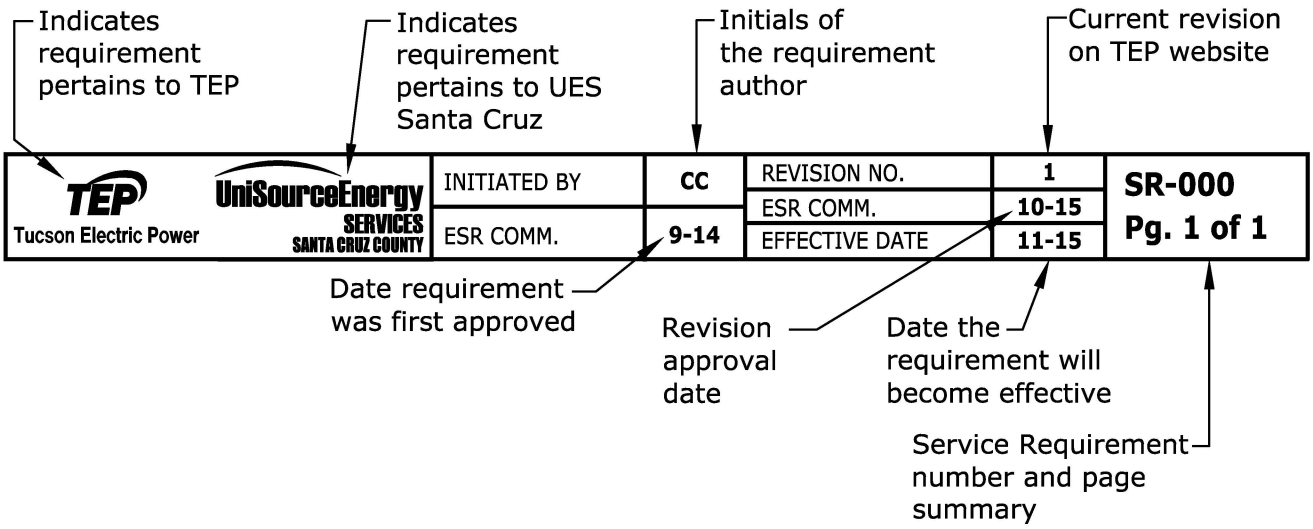

Figure 2

Indicates requirement pertains to TEP only

TEP Tucson Electric Power	INITIATED BY	RS	REVISION NO.	0	SR-000 Pg. 1 of 1
	ESR COMM.	8-78	ESR COMM.	-	
			EFFECTIVE DATE	8-78	

Indicates requirement pertains to UES Santa Cruz only

UniSourceEnergy SERVICES SANTA CRUZ COUNTY	INITIATED BY	MS	REVISION NO.	2	SR-000 Pg. 1 of 1
	ESR COMM.	2-84	ESR COMM.	11-16	
			EFFECTIVE DATE	11-16	

5 CONTACT INFORMATION FOR TUCSON ELECTRIC POWER

Emergency.....623-3451
24 hours/day, 7 day/week
Storm Damage, Hazards to Life/Property, Power Lines Down

Power Kills.....918-8300
(Please call 5 working days in advance for power kills after charges have been paid)
Access to TEP Equipment.....918-8300
(Duct sweeps, mandrel duct, or pull cable inside this equipment)

Blue Stake Center.....811
Call **BEFORE** you dig.....OR.....811
Line location prior to excavation

New Construction Offices
New Installations-Increases-Relocations-Removals-New Construction
Applications.....918-8300
FAX.....917-8794

Design, Service Requirements & Service Delivery Offices
North & South District
Fax Number.....917-8793
4350 E. Irvington Rd
Tucson, AZ 85714
East of Alvernon Rd, Gate #2, Design Build Building
7:00 a.m. - 3:30 p.m. (Mon-Fri)

Mailing Address
P.O. Box 711
Mail Stop OH107
Tucson, AZ 85702

Customer Service.....623-7711
Telephone Hours
7:00 am - 7:00 pm (Mon-Fri)
Service Connection, Disconnect, Billing Inquiries, Credit, Collection

General Information.....571-4000
8:00 am - 5:00 pm (Mon - Fri)
Assistance for other Departments within TEP

Unisource Energy Corporation
88 E. Broadway
Tucson, AZ 85701

Internet Address:
http://www.tep.com

4 CONTACT INFORMATION FOR UNISOURCE ENERGY SERVICES NOGALES SANTA CRUZ COUNTY

Emergency.....1-877-837-4968
24 hours a day, 7 days a week
Storm Damage, Hazards to Life/Property, Power Lines Down

Power Kills.....(520) 761-7951
(Please call 5 working days in advance for power kills)
Access to UES Equipment.....(520) 761-7951
(Duct sweeps, mandrel duct, or pull cable inside this equipment)

Blue Stake Center.....811.....OR.....1-800-STAKE-IT
Call BEFORE you dig.....1-800-782-5348
Line location prior to excavation

New Construction Offices
New Installations-Increases-Relocations-Removals-New Construction
Applications.....(520) 761-7951
FAX.....(520) 761-7947

Design, Service Requirements & Service Delivery Offices.....(520) 761-7951

Mailing Address
1710 N. Mastick Way
Nogales, AZ 85621

Customer Service.....1-877-837-4968
Telephone Hours
7:00 am - 7:00 pm (Mon-Fri)
Service Connection, Disconnect, Billing Inquiries, Credit, Collection, General Information

Internet Address
http://www.uesaz.com

Engineering E-Mail Address
nogalesengineering@tep.com

Governmental Contacts:

City of Nogales
Public Works
1450 N Hohokam Drive
Nogales, AZ 85621
(520) 287-7245

Santa Cruz County
Building Department
2150 N. Congress Drive
Nogales, AZ 85621
(520) 375-7830

DEFINITIONS

Applicant: Any person, firm, corporation, organization, entity or governmental agency applying for service from the Company.

Company: Tucson Electric Power (TEP) or UniSource Energy Services (UES) acting through its duly authorized officers or employees within the scope of their respective duties.

Connected Load: The sum of the power rating of the customer's electrical apparatus connected to a Company meter.

Construction Drawing: A drawing showing electrical facilities.

Crew: Group of Company Journeyman.

Customer: Any person, firm, corporation, organization, entity or governmental agency purchasing, utilizing, or prepared to utilize service from the Company under its Rules and Regulations at one location.

Demand: The average rate at which energy is delivered during any specified period of time. Demand is normally expressed in kilowatts and measured over a 15 minute time period.

Distribution Lines: Overhead (OH) or Underground (UG) lines operated by the Company at distribution voltage, which are constructed along public highways, bona fide rights-of-way, and including rights-of-way on customer's property.

Energy Diversion: A loss of revenue as a result of a customer tampering with or bypassing Company metering or distribution equipment.

Line Work: The installation of Company facilities such as poles, transformers, junction boxes, cable, wire, or any work other than installation of the service.

Month: The period between any two regular readings of the Company's meter(s) at approximately 30-day intervals.

Point of Delivery: The location on the customer's building, structure, or premise where all wires, conductors, or other current-carrying devices of the customer join or connect with wires, conductors or other current-carrying devices of the Service Provider.

Point of Delivery (Three-Phase Underground): Secondary terminals at the Service providers pad-mounted transformer.

Preliminary Electric Design: Preliminary drawing showing electrical facilities provided to the Customer for review and approval prior to completion of construction drawing.

DEFINITIONS

Service Work: Any work required to run the service line.

Service: The last cable or wire extending from an overhead (OH) or underground (UG) Company facility to the customer's project.

Service Provider: Tucson Electric Power (TEP) or UniSource Energy Services (UES) acting through its duly authorized officers or employees within the scope of their respective duties.

TEP: Tucson Electric Power

UES: UniSource Energy Services - Santa Cruz County

APPLICATION FOR SERVICE

Type of Service & Limitations

Upon the customer's request, TEP will specify the type of distribution service available (voltage and number of phases) at any given location for utilization by the customer. Service shall be provided through one service connection at one point of delivery for each unique customer premise. Customers with facilities requiring more than one service voltage are responsible for providing those additional voltages through their own means (e.g. step-down transformers). Customers with loads exceeding the limits defined below may be required to receive primary metered service. The electric energy furnished will be alternating current 60 hertz, single or three-phase at one of the following standard nominal voltages, subject to the limitations shown:

Single-Phase (Residential & General Service or Light and Power Customers)

120 volts, 2 wire (30A maximum service entrance size) is no longer available for new service and is for maintenance only.

120/240 volts, 3 wire from pole mounted transformer: limited to 100 kVA maximum load and/or 600A maximum service entrance size.

120/240 volts, 3 wire from pad-mounted transformer: limited to 167 kVA maximum load and/or 800A maximum service entrance size. Loads of 530A or more will require 2 - 4 inch duct systems for parallel service conductor.

Three-Phase (General Service or Light and Power Customers)

240/120 volt, 4 Wire Delta: Is no longer available for new service and is for maintenance only or an upgrade of an existing 3 phase service per limitations for OH and UG service. This voltage is not available from TEP's underground distribution system. When available, service is limited to 600 amp maximum service entrance size for underground service from pole mounted transformers and to 1200 amp maximum service entrance size for overhead service from pole mounted transformers.

208Y/120 volt, 4 Wire: Limited to 3,000A maximum service entrance size for underground service from a pad mounted transformer, limited to 1600A maximum service entrance size for overhead service from pole mounted transformers; limited to 600A maximum service entrance size for underground service from pole mounted transformers. Not available for service to mobile home lots per NEC 550-21.

480Y/277 volt, 4 Wire: This service will also be provided for all 480 volt three-phase, three-wire services unless otherwise specified by TEP. Limited to 4,000A maximum service entrance size for underground service from a pad mounted transformer: limited to 800A maximum service entrance size for overhead service from pole mounted transformers: limited to 600A maximum service entrance size for underground service from pole mounted transformers.

The maximum size for customer owned underground service conductors to TEP's equipment is 500 kcmil.

4,160/2,400 volt, 4 Wire: Primary metered service available only at TEP's option.*

13,800Y/7,970 volt, 4 Wire: Primary metered service available only at TEP's option.*

* Refer to SR-451 for primary metered service requirements.

Temporary Service

TEP will install temporary service to a customer providing the customer pays the estimated installation and removal cost as well as the normal monthly billings on the electric meter. It is imperative that the customer make application for temporary service by calling (520) 918-8300 at the earliest possible time as any jobs requiring a meter and service will fall into our normal construction schedules. The installation and removal cost must be paid prior to the release of the job for construction. For details on the overhead and underground temporary services, please refer to the appropriate SR standards.

Energy Diversion

The responsible individual must notify TEP within 24 hours by calling (520) 918-8300 upon bypassing TEP's meter. Bypassing TEP's meter without notification to TEP may be considered Energy Diversion under Arizona law and may subject the customer to criminal and/or civil damages. (Arizona Revised Statutes §13-1602, §13-1802, §40-492)

Additionally, the individual will be subject to fees as approved by the Arizona Corporation Commission.

Notice to Applicants

The default Pricing Plan for Temporary Service and Commercial Service is GS-10. The default Pricing Plan for Residential Service is R-01. For services other than Temporary, Commercial, and Residential, please consult the Pricing Plans listed at tep.com. Upon application for service or upon request, the Applicant or Customer will select the applicable Pricing Plan best suited to his or her requirements. The Company may assist in making this election, but wil not be held responsible for notifying the Customer of the most favorable Pricing Plan, and wil not be required to refund the difference in charges under different Pricing Plans.

Preliminary Notification

To aid architects and engineering firms in providing TEP with advance notification and preliminary engineering data and to obtain the location from which a new building will be served, these firms should submit plans for new buildings and projects with a New Construction Application (see page SR-1.13). This will enable TEP to provide more complete information with minimal delay to these firms and eliminate some of the problems in the early facilities design stage. This form does not supersede TEP's present application requirements, but is a supplemental aid.

Obtaining Information

In order to obtain service at the time desired, application should be made as early as possible. There are no fees for making an application. The customer should keep the Company informed as to the progress of his project and when he anticipates he will be ready for service. See page SR-1.13 for making application for new service.

Removal of Facilities

Requests for the removal of TEP facilities (Services / Distribution lines) for the purpose of demolishing of buildings or sites for development, will be made in writing. Utilize Removal Letter, Form1.13A, Internet access at www.tep.com, or by telephone at (520) 918-8300. Please be sure to include the account and meter number. Due to normal construction scheduling, a minimum of two weeks (10 working days) notice will be given to TEP prior to the date the service(s) are to be removed. If line work is required, TEP will remove the Distribution facilities within 90 days. Contact the new business Project Manager to verify scheduling.

Service Scheduling

TEP will schedule and install services (both new and increases) *not requiring line and/or transformer work* on a daily basis as crew loading permits, but usually not more than five working days after City of Tucson, Pima County, Marana, Oro Valley or South Tucson and Sahuarita inspection clearances are received by TEP. However, this time frame may be extended depending upon crew availability and inclement weather.

Reminders:

1. May 30, July 4, September 5, November 24, November 25, December 23, and December 26 are holidays for TEP employees. (2011 calendar year)

2. Permanent addresses should be on switch panels before requesting governmental inspections and must agree with the address on permit and new construction application.

3. Please be aware that there may be as much as a 24-hour time delay in notifications to TEP from the governmental inspection agencies after they have made their inspection in the field. This will result in service work not being released until the following workday.

Governmental Contacts

Permits and inspections will be required by governmental agencies before Tucson Electric Power Company will install electric cable or set a meter on. For information on obtaining permits, please contact the appropriate governmental agency.

City of South Tucson
1601 S. 6th Ave
Tucson, AZ 85713
(520) 792-2424

City of Tucson
Development Services Center
201 N. Stone Ave
Tucson, AZ 85701
(520) 791-5550

Pima County
Development Services Center
201 N. Stone Ave
Tucson, AZ 85701
(520) 724-9000

Town of Sahuarita
Public Works
P.O. Box 879
Sahuarita, AZ 85629
(520) 822-8866

Arizona Dept. of Manufactured Housing
Department of Building & Fire Safety
400 W. Congress Street, Suite 121
Tucson, AZ 85701
(602) 364-1067

Town of Marana
Planning & Zoning
13555 N. Sanders
Marana, AZ 85653
(520) 382-2600

Town of Oro Valley
Planning & Zoning
11000 N. La Canada Drive
Oro Valley, AZ 85737
(520) 229-4800

- Be sure to take out the proper governmental permit
- Manufactured homes in the County require both County & State Clearances

Residential/ Commercial New Construction Application

Please Print

Date: _____ Permit No: _____

Required date: (date you need power): _____

A. Official Address Information

Official Service Address: _____

City: _____ Zip Code: _____

Lot#: _____ Subdivision Name: _____

Legal: T_____ R_____ S_____ Q_____

B. Responsible Party for Billing- Residential

Primary Name: _____ Telephone#: _____

Spouses Name: _____

Mailing address: _____

Social Security number: _____ Driver's License: _____

Employer: _____ Address: _____

Telephone#: _____ Other TEP accounts: _____

C. Responsible Party for Billing- Commercial

Business Name: _____Primary Number:_____

Business Type: Corp: _____Partnership: _____ LLC: _____ Sole Proprietor: _____

Officer/Partner/Owner Name_____

(Person with Authority to Accept Financial Responsibility for the Account)

Phone Number for above:_____ Tax ID:_____

Mailing address_____

D. Contact Information

Site Contact Name: _____ Telephone#: _____

Company Name: _____ Cellular #: _____

Company Address: _____ Pager #: _____

E. Electrical Information

Type of Service:

New Service: ____ Increase: ____ Temporary: ____ Relocation: ____ Removal: ____

Underground (UG): _____ or Overhead (OH) _____ Voltage_____

Single Phase: _____ or Three Phase_____ Amperage: _____

Power kill required: Yes_____ No_____ Unknown_____ Building Square footage_____

☐ Solar Installation ☐ Electric Vehicle

Cooling & Heating Equipment:

A/C Tonnage: _____ or Evap: _____

Heat pump tonnage: _____ or Gas: _____

F. Additional Information: _____

NOTICE TO APPLICANTS:

THE DEFAULT PRICING PLAN FOR TEMPORARY SERVICE AND COMMERCIAL SERVICE IS GS-10. THE DEFAULT PRICING PLAN FOR RESIDENTIAL SERVICE IS R-01. FOR SERVICES OTHER THAN TEMPORARY, COMMERCIAL, AND RESIDENTIAL, PLEASE CONSULT THE PRICING PLANS LISTED AT TEP.COM.

BE SURE TO SEND A COPY OF THE OFFICIAL ADDRESS AND LEGAL DESCRIPTION OF THE PROPERTY TO THE APPROPRIATE NEW CONSTRUCTION OFFICE BELOW:

- IF 1 ACRE PARCEL OR LARGER, ALSO SEND SITE PLAN
- IF OVER 200 AMPS, ALSO SEND ELECTRICAL PLANS.
- BE SURE TO OBTAIN THE PROPER GOVERNMENTAL PERMITS
- UPON RECEIPT OF **ALL** ABOVE INFORMATION, THE AREA FIELD TECH OR DESIGNER WILL CONTACT YOU WITHIN 5 WORKING DAYS

Mail To:
New Construction Applications
P.O. Box 711 Mail stop DB-101
Tucson, Arizona 85702
Fax # 520-917-8794

Governmental Agencies

City of South Tucson	792-2424	Town of Marana	382-2600
City of Tucson	791-5550	Town of Oro Valley	229-4800
Pima County	740-6490	Town of Sahuarita	822-8866
*Az. Dept. of Manufactured Housing	602-364-1067	(* Manufactured Homes require City/County and State Clearances)	

Tucson Electric Power Company
P.O. Box 711
Tucson, Arizona 85702

Date: _____

Request for removal of electric service facilities: (Incomplete information may delay request)

I/We request the removal of electrical service facilities at the following address:

_____

Meter number (Required): _____

Reason for removal: _____

Requested completion date: _____

Tucson Electric Power Company (TEP) cannot accommodate any removal requests that are not in writing and signed by the owner of subject property. A TEP Field Technician will perform a site inspection within two weeks from receipt of written request.

Property owner (Please print): _____

Mailing address: _____

Signature: _____ Telephone number: _____

Completed form may be mailed or faxed to Tucson Electric power.

Mailing address:
Tucson Electric Power Company
Attn: New Construction Desk, Mail Stop DB-101
P.O. Box 711
Tucson, Arizona 85702

Fax number:
Attention: New Construction Desk
(520) 917-8794

Answers to commonly asked Questions

Below, you will find locations in the book which answer some of the most commonly asked questions.

Earth Work - Trenching, Duct & Equipment

SR-209 Conduit and concrete.
Approved conduit types.
Mandrel inspections.

SR-209 Trench Depth, conduit locations, underground equipment locations.

SR-210 Sleeve(s) can be installed when a portion of a trench to be closed immediately, road crossings, or if boring a road is required. To be completed as a continuous conduit system.

SR-215 Horizontal radius in conduit system - 12'-6" for 2.5" (PVC), 4" and 6" ducts.
4' for 2.5" Wave - Rib or Dura· Line HDPE

SR-220 Underground riser - Concrete the first 10' from the pole. Use Band-It straps for the concrete poles, Riv-Nuts for steel and Fiberglass poles. Vertical radius of duct system - 90° x 48" radius (6" ducts); 90° x 36" radius (2 1/2", and 4" ducts).

SR-230 Bumper posts - Black with yellow reflective tape.

SR-233 3 Phase Transformer pad sizes - Figure 1 and Figure 2. Secondary ducts to the right - primary to the left (10' of concrete for primary). Concrete encasement is required if conduit run is more than 150' in length, or any length with the a combination of 270° (or more) of bends, not to exceed 360°. Cut ducts 2" above the top of the pad.

SR-234 3 Phase J2 Cabinet installation - Base provided by TEP; Customer to pick up.

Services

SR-308 Three-phase Junction boxes and duct sizes. Standoff brackets required for risers.

SR-310 Single-phase service - 2.5" continuous duct for 400 Amp & under; 4" duct system if over 400 Amp. Service Riser - Ridgid or Intermediate steel. (36" x 45° or 36" x 90° radius for 2 1/2" conduit. 36" x 90° radius for 4" over 400 Amp).

Metering

SR-405 Maximum and minimum meter socket heights (maximum 6'-3"; minimum 3'-6").
Meter socket identification.
Meter / Equipment Rooms.
Single dwelling residential meter locations.

Fault Info

SR-510 Fault Current.

Residential Underground Project

This outline is to show the responsibilities of the Customer and TEP/UES. The order in which these responsibilities are laid out will aid in the timely completion of each project.

Customer Responsibilities	TEP/UES Responsibilities
1. Customer contacts TEP's New Construction Department at (520) 918-8300 or Internet at www.tep.com. Customer provides the following: 1) Residential New Construction Application information. 2) Site plan if 1 acre or larger and legal description of the property. 3) Electric load plan if over 200 amps. 4) Electrical Permit Number.	**2**. A TEP / UES Designer, Field Technician or Planner reviews the plans and provides a Preliminary Electrical Design drawing for the customer within 20 days (if necessary). The Preliminary Electrical Design will include the Electrical Service Requirements specifications, easement requirements (if required) and the need for a contract and / or costs for the project (if required).
4. Customer approves or requests changes of the Preliminary Electrical Design. Customer signs the approval letter & faxes it to the assigned Scheduling Coordinator (if one is sent to the customer).	**3**. An Approval Letter is mailed to the customer by the Scheduling Coordinator. This correspondence will include the Preliminary Electrical Design Drawing, related Electrical Service Requirements, and the request for a legal description and sketch for the new easement (if required).
6. If required, customer submits the original copies of the legal description and sketch written by a Registered Land Surveyor (RLS).	
8. Customer signs, notarizes the easement and returns to TEP / UES.	**5**. The Designer, Field Technician, or Planner prepares a final Construction Drawing of the electrical system. Copies are sent to the customer and other utilities (not all utilities receive copies, customer to inquire with each utility) within 20 days, by the Scheduling Coordinator.
10. Customer executes the agreement and returns it to TEP / UES, if required.	
12. Customer may contact a Field Technician prior to starting construction, either by phone (to answer any questions) or an on site pre-construction meeting (if required).	**7**. The Designer, Field Technician, or Planner forwards the legal description & sketch to the Land Department to review and prepare for the customers signature. The prepared easement package is sent to the customer within 20 days.
13. Customer to stake out the easement for the trenching contractor and TEP / UES inspector. The contractor digs the trench, (refer to the trenching & conduit installation specifications per the approved construction drawing) installs the conduit system (including any service stubs) and calls for inspection.	**9**. The Designer, Field Technician, or Planner prepares any required Billable estimates. The Contract Coordinator sends the agreement to the customer (i.e. Line Extensions, Prior to Improvements, etc.)
15. Customer calls for a concrete encasement inspection (if required) prior to backfilling the trench.	**11**. TEP / UES sends the "Approved for Construction Drawing" and correspondence letter **AFTER** the easements and / or Agreements are received.
17. Customer shades the trench with 1' of backfill over TEP / UES conduit system (if joint trench with other utilities and installs other utilities), then backfills the remainder of the trench (100%) and establishes final grade. Compacts & levels the pad site, installs pad per SR-209 & SR-208. Customer calls for the transformer pad site , pedestal site and mandrel inspections.	**14**. TEP / UES representative inspects the trench and conduit system and notifies the customer if Passed or Failed the inspection.
	16. TEP / UES representative inspects the concrete installation and notifies the customer if Passed or Failed the inspection.
19. Customer digs the service trench, installs the remaining service conduit (from the service stub out) system and service meter panel. Calls the governmental agency for inspection. · City of Tucson - 791-5550 · Pima County Building Codes - 740-6490 · South Tucson - 792-2424 · Town of Marana - 382-2600 · Town of Sahuarita - 648-1972 · Town of Oro Valley - 299-4800 · Az. Dept. of Manufactured Housing - 628-6920 Calls TEP for service inspection if required (i.e. over 200A and manufactured homes).	**18**. TEP / UES representative inspects the backfill, transformer site, pedestal site, J1 sites. Witnesses the customer representative mandrel pull and notifies the customer if Passed or Failed the inspection. Upon Approval, the customer will pour a slurry of concrete 1/2" thick inside the transformer pad opening, for rodent protection.
	20. TEP / UES representative inspects the service entrance and conduit system (if required) and notifies the customer if Passed or Failed the inspection.
	21. TEP / UES will install the service and meter **AFTER** the Final Clearance has been received from the governmental agency and Credit is cleared on the customers Billing account. Note: work loads and emergency power restorations may impact the installation date.

Commercial Underground Project

This outline is to show the responsibilities of the Customer / Contractor and TEP/UES. The order in which these responsibilities are laid out will aid in the timely completion of each project.

Customer Responsibilities	TEP/UES Responsibilities
1. Customer contacts TEP's New Construction Department at (520) 918-8300 or Internet at www.tep.com. Customer provides the following: 1) Commercial New Construction Application information. 2) Site plan and legal description of the property should include: Panel location and preferred transformer location. 3) Electric load plan should include: One-line diagrams, panel schedules if available, main panel size, air conditioning size per unit, motor sizes. 4) Electrical Permit Number.	**2**. A TEP / UES Designer, Field Technician or Planner reviews the plans and provides a Preliminary Electrical Design drawing for the customer within 20 days (if necessary). The Preliminary Electrical Design will include the Electrical Service Requirements specifications, easement requirements (if required) and the need for a contract and / or costs for the project (if required).
4. Customer approves or requests changes of the Preliminary Electrical Design. Customer signs the approval letter & faxes it to the assigned Scheduling Coordinator (if one is sent to the customer).	**3**. An Approval Letter is mailed to the customer by the Scheduling Coordinator. This correspondence will include the Preliminary Electrical Design Drawing, related Electrical Service Requirements, and the request for a legal description and sketch for the new easement (if required).
6. If required, customer submits the original copies of the legal description and sketch written by a Registered Land Surveyor (RLS).	**5**. The Designer, Field Technician, or Planner prepares a final Construction Drawing of the electrical system. Copies are sent to the customer and other utilities (not all utilities receive copies, customer to inquire with each utility) within 20 days, by the Scheduling Coordinator.
8. Customer signs, notarizes the easement and returns to TEP / UES.	**7**. The Designer, Field Technician, or Planner forwards the legal description & sketch to the Land Department to review and prepare for the customers signature. The prepared easement package is sent to the customer within 20 days.
10. Customer executes the agreement and returns it to TEP / UES, if required.	**9**. The Designer, Field Technician, or Planner prepares any required Billable estimates. The Contract Coordinator send the agreement to the customer (i.e. Line Extensions, Prior to Improvements, Feeder Differential, etc.)
12. Customer makes service application and provides the Electrical Permit number and clears credit on the Billing account.	**11**. TEP / UES sends the "Approved for Construction Drawing" and correspondence letter **AFTER** the easements and / or Agreements are received.
13. Customer may contact a Field Technician prior to starting construction, either by phone (to answer any questions) or an on site pre-construction meeting (if required).	**15**. TEP / UES representative inspects the civil work per step # 14 and notifies the customer if Passed or Failed the inspection. NOTE: For three-phase & single-phase projects, if executed easements are not returned at this point, courtesy inspections can be given up to the point of pulling a mandrel through the conduit system.
14. Stakes out easement for trenching contractor and TEP /UES inspector. For three-phase commercial projects: ▪ Trenches and installs duct and all sweeps plus 10' riser section. Calls for inspection before concrete encasement. ▪ Encases sweeps with concrete as needed. Calls for inspection before and after concrete encasement. ▪ Backfills trench and installs pad. (If pouring pad, calls for framing inspection before pouring). ▪ Installs bumper posts if required. Calls for inspection. ▪ Installs pull rope in conduit system and calls for mandrel inspection. Mandrel will be pulled through the conduit system in the presence of a TEP / UES inspector. If necessary, calls 918-8300 for access into existing TEP equipment. NOTE: Refer to TEP construction drawing for required specifications (and specifications for pullbox, PMH, PME and J-2 installation).	**16**. TEP / UES releases the job to construction once all the civil work is inspected and approved.
18. Customer installs service entrance, pulls in service conductors, color code tape ID the conductors and install an address label on each neutral conductor (for 3 Phase installations). If single phase installation, install the service entrance and conduit system (in preparation for TEP / UES cable installation). Call TEP / UES for trench, conduit, backfill and mandrel inspections.	**17**. TEP / UES schedules work in Construction that installs primary cable facilities (transformer, J-2's, PME units, etc.). Estimated 15 working days to complete job (30 days for project with a feeder system). NOTE: If a planned power outage is required to schedule the job, then RMT / Construction will coordinate the outage. The job will be completed when the outage can be scheduled.
19. Customer calls TEP / UES for the service inspection. Calls the governmental agency for their inspection. · City of Tucson - 791-5550 · Pima County Building Codes - 740-6490 · South Tucson - 792-2424 · Town of Marana - 382-2600 · Town of Sahuarita - 648-1972 · Town of Oro Valley - 299-4800 · Az. Dept. of Manufactured Housing - 628-6920	**20**. TEP / UES taps the customer's wires at the transformer (if three-phase commercial) and sets meter. If single-phase, TEP installs service cable and sets meter on. However, the following contingencies must be met: ▪ TEP/UES passes service inspection. ▪ Customer's credit clears. ▪ Final clearance is received from governmental agency.

CUSTOMER INFORMATION

Codes and Regulations

The standards herein are supplementary to, and are not intended to conflict with the rate tariffs of TEP on file with Arizona Corporation Commission, the National Electrical Code as approved by the American National Standards Institute, the National Electrical Safety Code, the Uniform Administrative Code, the Uniform Building Code, the Mobile Home Manufacturers Association Standards for Mobile Homes, and such state, county, and other governing authorities' laws, codes, ordinances, orders, and statues as may be enforced within the cities, town, or areas to which TEP furnishes service.

Customer Installation

The customer shall install and maintain all wiring and equipment beyond the point of delivery, except for meter and special equipment installed by TEP or Service Provider. The customer's entire installation must conform to all applicable governmental codes and to accepted modern standards; and, if an affidavit or certificate of inspection or permit is required by law, or by TEP, the same must be furnished by the customer. In all cases, except for three-phase underground services and/or unless otherwise specified, "point of delivery" is the location on the customer's building, structure, or premises where all wires, conductors, or other current-carrying devices of the customer join or connect with wires, conductors, or other current-carrying devices of TEP. For three-phase underground services the point of delivery will normally be the secondary terminals of a pad-mounted transformer. Location of the point of delivery shall be determined by TEP in conformity with its standards and specifications, rate schedules, and construction standards as they exist from time to time.

Access To Premises

The customer should give the duly authorized agents and employees of TEP, when properly identified, full and free access to the premises of the customer at all reasonable hours for the purpose of installing, inspecting, adjusting, repairing, maintaining, replacing, or removing any of TEP's facilities on the premises of the customer or for any purpose incidental to the service supplied by TEP including emergency situations.

Employee Identification

Each employee whose duty requires access to the premises of the customer is furnished with an identification card bearing his or her photograph. The customer should deny admittance to anyone claiming to be an employee who refuses to display a properly approved identification card. Any uncertainty of identity or of purpose or any unreasonable number of calls should be reported to TEP immediately.

Employee Compensation

Employees of TEP may not demand or accept any compensation from a customer for service rendered in the line of duty. However, certain employees do collect money from customers for settlements of accounts due TEP and of which the customer is already aware.

Tampering

The breaking of seals, tampering with the meters, wires, or any other property of TEP, by persons not authorized to do so by TEP is prohibited by law.

Energy Diversion

A loss of revenue as a result of the customer tampering with or bypassing Metering or Distribution equipment.

Protection of TEP Property

The customer at all times shall protect the property of TEP on the premises of the customer and shall permit no person other than the employees, agents, and authorized contractors of TEP and other persons authorized by law to inspect, work on, open or otherwise handle the wires, meters, or other facilities of TEP. In case of loss or damage to the property of TEP as a result of any carelessness, neglect, or misuse by the customer, any member of his family, or his agents, servants, invitees, or employees, the customer shall, at the request of the company, pay to TEP the cost of any necessary repairs or replacements of such facilities or the value of such facilities.

Design of Customer's Equipment

The company does not design, plan, install, or maintain the customer's wiring, electrical equipment, or other customer owned facilities.

Approved Construction Drawings / Service Requirements

Any installation change to an approved construction drawing, or deviation from Electrical Service Requirement book standards without prior approval from the Design Group, is subject to Billable charges. These changes may include the cost of additional material, labor and engineering time.

Interruptions

TEP/UES will use reasonable diligence to supply continuous distribution service to the customer, but does not guarantee such supply against irregularities or interruptions. TEP/UES shall not be considered in default of its service agreement with the customer and shall not otherwise be liable for any damages occasioned by any irregularity or interruption of service. The customer shall be responsible for paying for and installing the necessary equipment to guard against high or low voltage or the loss of one phase in a three-phase system. The customer shall not operate the equipment in such a manner as to cause any unusual voltage fluctuations on or other disturbances to TEP/UES's system.

Defaults

TEP/UES shall not be considered in default of its service agreement and shall not otherwise be liable as a result of any failure by TEP/UES to perform any obligation, if prevented from fulfilling such obligations by reason of delivery delays, breakdown of or damage to facilities, acts of God or public enemy, strikes or other labor disturbances TEP/UES or the customer, civil, military or governmental authority, or any cause beyond the control of TEP/UES.

Call 5 days in advance for power kill after charges have been paid..... (520) 918-8300
Access to TEP equipment..... (520) 918-8300
Access to UES equipment..... (520) 761-7952

Call BEFORE you dig
Blue Stake Center..... 811

Unmetered Energy

Devices or attachments shall not be connected to TEP facilities in such a manner as to permit the use of unmetered energy, except with prior written consent of TEP.

Resale of Energy

Electric service supplied by TEP is for the exclusive use of the customer on the premises to which such service is delivered by TEP. TEP will not supply electric service for submetering and resale by the customer except in rental trailer parks as approved by the Arizona Corporation Commission.

Attachments To Company Facilities

Attachments of any kind or nature on TEP poles or other equipment, without previous consent will not be permitted.

Access To Pad Mounted Equipment

Only employees and authorized contractors of TEP are permitted entry into the Company's pad-mounted equipment. When it becomes necessary for a customer or his contractor to install duct sweeps, mandrel duct or pull cable inside this equipment, arrangements must be made by calling (520) 918-8300. The request must be made 5 working days in advance. Requests that are made without 5 working days notification will be worked as TEP's work schedule allows.

Trimming Trees

The customer must notify the Blue Stake Center and request an overhead spot at 1-800-STAKE-IT prior to trimming in the proximity of overhead conductors of TEP. The customer shall permit TEP to trim or remove any trees or other vegetation that may interfere with the safe operation of TEP's facilities.

MISCELLANEOUS REQUIREMENTS

Rights-Of-Way

TEP/UES shall be granted all rights-of-ways and easements in a form acceptable to and at no cost to TEP/UES for the erection, maintenance, repair, replacement, and removal for use of any and all distribution facilities necessary or convenient for the supplying of electric service to the customer. It is responsibility of the customer to provide such easements and right-of-way. The customer will also provide free, safe, and unimpaired access at reasonable times to the premises of the customer for the purpose of reading meters, testing, repairing, removing or exchanging any or all equipment belonging to TEP/UES. TEP/UES may discontinue service after proper notice is issued, if violations of this right of free, safe, and unimpaired access continue to occur.

Line Location Prior to Excavation

Arizona Revised Statutes, Sec. 40-360.21 through Sec. 40-360.28 requires that persons excavating in a public right-of-way or utility easement obtain information concerning underground utility locations in the area before excavating. Under the statutes, excavation is defined as any disturbance of the ground surface which includes the setting of property pins. To request information or field location of electric lines, call the "Blue Stake Center", 1-800-STAKE-IT (1-800-782-5348) at least two working days prior to excavation.

High Voltage Power Lines And Safety Restrictions

Care must be taken by the customer in making installations of antennas or other facilities near or adjacent to TEP/UES lines so that under all conditions the installation will not be under or fall across TEP/UES lines nor contact them in any way, and thereby constitute a hazard to life and property. The customer will not approach (within 10 feet) any overhead high voltage conductors of TEP/UES without the prior written consent of TEP/UES. For activity near overhead power lines, see Arizona Revised Statutes 6.4, Sections 40-360.41 through 45. If activity is near overhead power lines, call the "Blue Stake Center," 1-800-STAKE-IT (1-800-782-5348) and request an "overhead spot".

Damage To Company Facilities

When electric facilities are damaged in the course of excavation or in any other manner, the total cost of repair will be borne by the party responsible for the damage.

Grade Changes

Any costs incurred by TEP/UES due to a change in surface elevation will be borne by the party responsible for the change.

Relocation of Electric Facilities

TEP/UES may agree to relocate existing facilities if the customer provides all required right-of-way and pays in advance all costs of the relocation.

Power Outage Request

All charges are due and payable before the company will schedule a customers request for a Scheduled Power Outages by calling TEP at (520) 918-8300 or UES at (520)761-7952. Requests must be made 5 working days prior to the time the outage is required. Power outage requests that are made without 5 working days notification will be worked as TEP/UES's work schedule allows. Work requiring access to an enclosure which has been sealed by TEP/UES must be approved by TEP/UES for each specific job or location.

TEP/UES SANTA CRUZ GENERAL REQUIREMENTS FOR LEGAL DESCRIPTION, EXHIBIT DRAWING AND ELECTRONIC FILE FOR EASEMENT

Introduction

This section outlines the requirements which the professional land surveyor must consider when preparing a legal description and exhibit drawing for a proposed easement on behalf of their client, our customer. These requirements are provided to achieve an optimum degree of uniformity of product submitted to TEP/UES.

- Legal description will be prepared and stamped by a Professional Land Surveyor in good standing registered in the State of Arizona.

- The submitted legal description for an easement to be granted shall meet the criteria set forth in Section 14 of the PDF titled, "Arizona Boundary Survey Minimum Standards," available on the Arizona Board of Technical Registration website. Page size must be 8.50 x 11.00 inches in portrait orientation.

- An exhibit drawing must accompany the legal description to visually support the written narrative (see requirements below).

Legal Description

1. Caption
   a. Indicate use in a general manner, such as: "An electric easement within a portion of...." DO NOT state specific use (i.e., particular type of equipment nor its use as overhead or underground).

   b. State geographic location by:

- Reference to a government land division within the U.S. Public Land Survey System, a Land Grant, a Reservation, a Homestead, etc.
- Lot or parcel (number or letter), block or tract within a county recorded subdivision identifying said County Recorder's Office and the recordation number of said subdivision.
- Citation of the recorded deed of the parcel of land the easment will encumber.

Body

- A clearly stated basis of bearing, referencing two existing, physically described controlling monuments.

- Sufficient data to enable a mathematical verification of the easement being inscribed within the property being encumbered.

- Where described, curve segments shall contain sufficient information to allow verification of the data by mathematical analysis. Curves are presumed to be circular and tangent. All other non-tangent and/or non-circular curves must be noted in the description.

- Identify and note any existing, recorded electric easement(s) which is/are intended to join with the new easement as a continuous, uninterrupted land right.

- Report the total area of the easement(s) in square feet when less than an acre (rounded to the nearest foot) or in acres when area exceeds 43,560 square feet (three places to right of the decimal).

TEP/UES SANTA CRUZ GENERAL REQUIREMENTS FOR LEGAL DESCRIPTION, EXHIBIT DRAWING AND ELECTRONIC FILE FOR EASEMENT

Exhibit Drawing

- Page size to be 8.50 x 11.00 inches (ANSI A).
- Title block must state the township, range, section(s) and meridian of the easement location.
- A north arrow.
- If applicable, a line table and/or curve data will be shown.
- Note assessor's parcel number (APN) of affected parcel.
- The county recording number of the deed of the underlying parcel.
- Boundary lines shown of all parcels affected by the easement.
- Depict existing, recorded electric easement(s) which is/are intended to join with the new easement.

Deliverables

- In its effort to operate and maintain a geographic information system (GIS) for both corporate land rights and facility mapping purposes, TEP/UES now requires delivery of specific electronic files by the customer (see b & c below).

- An original, stamped paper final draft which meets County recording requirements based on A.R.S. 11-480.
- CAD file of the results of survey drawing (AutoCAD 2005 or newer) (.DWG or .DXF) geo-referenced to the minimal standard of Arizona State Plane Grid Coordinate System NAD83/HARN92, AZ Central Zone, State Plane Int'l Feet. Newer published National Spatial Reference System (NSRS) datums by the NGS such as NAD83(CORS96), NAD83(2007) and NAD83(2011) are acceptable. Please note as part of the required metadata file.
- Metadata text file (include projection, datum, project name, Company/Firm, name of preparer and date).

- Below are a resources for geodetic control for GPS RTK localization of an easement survey:
- PCDOT/TDOT geodetic control points found at http://gis.pima.gov/maps/mapguide/.

- NOAA NGS Survey Marks and Datasheets site http://www.ngs.noaa.gov/datasheets/

- Santa Cruz County (AZ) Public Works Department, a comprehensive control survey by CPE Consultants LLC (March 2014) titled, "Santa Cruz County GIS Control Monument Survey".

- NOAA NGS OPUS online positioning solution of a GPS static session http://www.ngs.noaa.gov/OPUS/

200 SECTION
LINE EXTENSIONS/CIVIL

TITLE	SR-No.
General Information:	
Qualifications for Three-Phase Service Overhead Line Extensions Underground Line Extensions Subdivision Line Extensions	2.01
Additional Charges	2.02
New Subdivisions:	
Provisions for Service Ducts for Road Crossing	2.03
Underground Line Extensions:	
Single-Phase Requirements Three-Phase Requirements	2.04
Installations:	
Duct and Concrete Installation	205
Trench, Backfill	207
Site Preparation for Equipment Pads on Sloping Grades	208
Trenching, Underground Residential Distribution (U.R.D.)	209
Sleeve Installation	210
Trench and Duct Encasement, Drainageway Crossings	212
Trenching 2.5", 4" & 6" Conduit Installation	215
Duct Stub Detail	218
Underground Riser, Customer Installed	220
~~Riser Details - TELCO/CATV/CAP~~ (MOVED TO SECTION 805)	~~221~~ ◄
Distribution Pullbox with Manhole	225
Pullbox 15kv with Lid (Reference Only)	226
Equipment Barrier, Protective	230
Excavation & Duct Placement for 3-Phase Fused Junction Cabinet (F2)	232
Transformer Pad Underground 3-Phase	233
Excavation & Duct Placement for 3-Phase Junction Cabinet (J2)	234
Excavation & Duct Placement for 1-Phase Junction Cabinet (J1)	235
Box Pad Installation	240
Capacitor Installation	241
Gas Insulated Switch Installation	242

LINE EXTENSIONS - GENERAL

TEP will make a distribution line extension over the shortest feasible route. TEP may agree to an extension over an alternate route provided the customer pays all additional costs. Extensions must begin from a TEP circuit of the appropriate size, phase, and voltage class required to serve the subject customer project. For example, a customer requesting three-phase 600A primary service will require an extension from a TEP three-phase 600A primary line. A 600A primary extension cannot be made from a three-phase 200A primary line or from a single-phase 200A primary line. Likewise, a customer requesting three-phase secondary service will require, at minimum, a three-phase 200A primary line extension; a single-phase primary extension will not suffice for three-phase service.

QUALIFICATIONS FOR THREE PHASE SERVICE

General Service or Light and Power Customers qualify for a three-phase line extension under the standard line extension policy if either of the following applies:

1) Customer has a minimum service entrance rating of 400A (which may be the sum of two 200A services grouped together and served from the same transformer).
2) Customer has a single three-phase motor rated 10hp or greater.

For three-phase line extensions where these requirements are not met, the customer will be required to pay the additional line extension cost from the point of origin as per the TEP Rules and Regulations governing Special or Excess Facilities. Residential Customers do not qualify for three-phase service.

OVERHEAD LINE EXTENSIONS

Free Allowance

Upon an applicant's satisfactory completion of required site improvements, TEP will make extensions from its existing overhead facilities of proper voltage and adequate capacity free of charge a distance of up to 500 feet. The distance of 500 feet will be measured by the shortest feasible route along public streets, roads, highways, or suitable easements from the existing facilities to the applicant's point of delivery. Line extensions to temporary services, unusually small loads not consisting of a residence or a permanent occupied building will not be granted the 500 foot free allowance.

Deposit

For overhead line extensions in excess of the free allowance, a non-interest bearing cash deposit must be made for the cost of the excess footage. TEP will refund the deposit under the terms of the contract for each permanent customer connected to the overhead extension for which the deposit was made. Any new connection made to a refundable line extension that requires its own separate contract, will not be applied as a refund connection. The total refund will not exceed the amount of the initial deposit.

UNDERGROUND LINE EXTENSIONS

In addition to any required deposit for the length of the distribution line (see Overhead Line Extensions) the customer will be required to pay the difference in cost between an underground line extension and an equivalent overhead line extension as a nonrefundable cash payment. The customer may, with the consent of TEP and in accordance with TEP Standards, provide trenching, backfilling (with necessary imported fill), conduit system, pole risers, pull boxes, switch bases and pads as part of the overhead-underground differential payment. The customer is also responsible for the installation any other civil material provided by TEP as noted in a TEP Construction Drawing.

SUBDIVISION LINE EXTENSIONS

Contracts for extensions made up to the perimeter of a duly recorded subdivision will be determined by the total footage of cable or wire and the class of line that is required to be extended in order to serve the new project / future load.

Contracts for extensions made inside of a duly recorded subdivision is determined by the total cable footage required to serve the subdivision and the number of lots being installed and energized under one contract.

HIGH DENSITY DEVELOPMENT DESIGNS

Due to the tight nature of these developments some of the Service Requirements standards may be difficult to obtain. However, all Service Requirements are necessary for the safe operation and maintenance of the utility facilities and must be followed. Planning for these requirements early in the design phase ensures the best outcome for all parties. The following list of Service Requirements highlights common areas of concern pertaining to this type of design. This list is not all inclusive and the entire Service Requirements Book should be used to ensure compliance with all standards.

1) SR 208 - Site Preparation
2) SR 209 - Trenching Underground Distribution
3) SR 215 - Trenching 2.5" , 4" and 6" Duct Installation
4) SR 230 - Equipment Barrier
5) SR 312 - Trenching, Service (Single Phase)
6) SR 405 - Metering Installations (General Requirements)
7) SR 418 - Multi-Metering Installations
8) SR 452 - Approved Metering and Service Equipment

You may contact the New Service Department at 520-918-8300 and speak with a Designer to help work through concerns and ensure compliance with these and all standards.

ADDITIONAL CHARGES

In addition to the normal cost associated with the installation of distribution facilities, the customer may be charged for the following:

1) The costs associated with problems caused by changes in apartment numbers.

2) The cost of alternate designs requested by the customer.

3) The cost of facilities in excess of TEP's standard installation, which are requested by the Customer and would not otherwise be required to provide adequate service.

4) Other costs of nonrecurring nature, specifically associated with the proposed installation.

NEW SUBDIVISIONS - PROVISIONS FOR SERVICE

Arrangements for the extension of electric facilities to a new subdivision are made through the Land Management Department and the Contracts Coordinator. The developer must provide:

1) A sepia copy of the recorded plat or development plan.

2) Construction contract deposit.

3) Differential payments as required for underground extensions.

4) Easements as required for the distribution extension, and any rights-of-ways necessary for approach lines must be dedicated on the plat. Additional easements may also be required and will be provided by a separate instrument in a form acceptable to TEP.

5) The area of installation shall pass all inspections before the electric distribution lines can be installed. Transformer pads and pedestals must be level at final grade prior to installing cable, transformers and terminating pedestals.

6) Individual lot boundaries shall be identified and remain identified until the distribution system has been installed.

DUCTS FOR ROAD CROSSING

Should a developer wish to pave or backfill areas prior to the installation of the remaining conduit system, the developer shall install the conduit(s) of the size and type which the project has been designed for by TEP. See per SR-210 for the specifications. If the conduit(s) is being installed for future use, the developer shall be responsible for providing the Design Department with a dimensioned "As Built" drawing showing the exact location of the conduit(s) and install per SR-218. The cost of pavement cuts or boring necessitated by lack of conduit(s) or the inability to locate such conduit(s) shall be borne by the developer.

SINGLE-PHASE UNDERGROUND LINE EXTENSIONS

REQUIREMENTS

The overhead/underground differential payment for single-phase underground line extensions to individuals as well as within subdivisions is usually satisfied if the customer provides all trenching, backfilling (including any imported backfill required), compaction, repaving, and all earthwork required for equipment pad sites. TEP reserves the right to design any single phase underground distribution system in a duct. For such installations, the following basic rules are applied.

1) All trenches shall comply with TEP's trenching and backfill requirements (joint and non-joint trenches).
2) Property corner pins must be identified and left in place and/or re-established in place for TEP inspectors' use in placing stakes for transformers, pullboxes, J1's, pedestals and backfill inspections.
3) The customer is responsible for the trench and/or excavation being properly located within specified easements and/or rights-of-way. All relocation costs resulting from improperly located trenches shall be borne by the customer.

THREE-PHASE UNDERGROUND LINE EXTENSIONS

REQUIREMENTS

The overhead/Underground differential payment for the three-phase underground line extensions is usually satisfied by the customer providing all earthwork and installing all necessary ducts, concrete pads, pole risers and other appurtenances as specified on the applicable TEP Standards for these items. Each installation will require advanced layout and approval by TEP as to satisfying the differential cost in this manner. The customer is responsible for the trench and/or excavation being properly within specified easements and/or right-of-way. All relocation costs resulting from improperly located trenches shall be borne by the customer.

1) Layout of the electrical system completed.

2) Obtain easements and agreements as possible.

3) Customer installs duct system and calls for inspection before backfilling the trench. Any concrete encased duct must be inspected prior to and after the pouring of concrete, but prior to backfilling the trench. After duct has been inspected and passed, customer to shade duct and install other utilities. A minimum of one foot seperation is required between TEP and other utilities.

4) Customer completes backfill and compaction as required.

5) Customer installs TEP approved precast pad or frames the concrete pad and calls for inspection.

6) Customer pours concrete pad, removes frame work and calls for a final inspection.

7) Customer installs pull rope and calls for mandrel inspection. Note: All contingencies must be satisfied prior to mandrel inspection including any billable costs, deposits and/or easements.

8) TEP installs the primary cable and pad-mounted transformer(s). Service point of delivery is typically at the secondary terminals in the transformer. Customer to furnish and install service conductors from the TEP transformer to the customers switchgear. **The service conductor size will be no greater than 500 kcmil.**

DUCT AND CONCRETE INSTALLATION

DUCT INSTALLATION

Duct shall be installed per the manufacturer's recommendations and shall be properly jointed together with couplings and/or cement and aligned such that there are no sharp edges on the inside to damage the cable.

Install 2 1/2" and 4" duct in accordance with SR-209, SR-215, SR-308, SR-308-A, SR-309, SR-310 or SR-312 as applicable. Install 6" duct in accordance with SR-215. Refer to appropriate SR drawing for details of duct installation at outlets, such as risers, box pads, transformers, pull boxes, etc. Install proper duct plugs at each outlet on each duct.

Horizontal and vertical direction changes in the duct at the coupling shall not exceed 5°. The minimum radius of bends depends on duct size and type of installation and shall be as specified in SR-215, SR-308 or SR-312 as applicable. The total of all deflections at couplings and bends shall not exceed 360° in any continuous duct run between outlets.

Customer installs duct system and calls for an inspection before backfilling the trench. Any concrete encased duct must be inspected prior to and after the pouring of concrete, but prior to backfilling the trench. After this part of the installation has been approved, the customer will backfill the trench in accordance with SR-207 and prepare to pull a steel mandrel no more than 0.50" smaller than the inside diameter of the duct. The next inspection will be made by TEP/UES when the mandrel is pulled through the duct. Prior to mandrel inspection the customer / contractor shall have a polypropylene pull rope of 5/16" min. diameter installed in the duct system. At the time of inspection the TEP customer will be issued **(the UES customer will provide the 2500 pound test "mule tape")** an appropriate length of footage calibrated "mule tape" to attach to the mandrel and pull in the duct. The "mule tape" will be used by TEP/UES for subsequent cable installation. Failure to have required inspections at the proper time will result in a delay until the duct is uncovered for inspection and the mandrel is pulled in the presence of the TEP/UES's inspector. TEP/UES reserves the right to require the installation of locatable "Tone Tape" (ARNCO " Tone -Tape" part number is WP 25 LC) in place of the polypropylene pull rope.

Only TEP/UES employees and authorized contractors working for TEP/UES are permitted entry into TEP/UES's pad-mounted equipment. If the customer or his contractor needs to work inside any pad-mounted equipment, he must arrange to have qualified TEP/UES personnel at the site while the work is being done. Arrangements must be made by calling 918-8300 (TEP) or 761-7952 (UES), five working days in advance.

APPROVED DUCT TYPES - 2 1/2" conduit provided by contractor. (After April 1, 2005)

2 1/2" Conduit - PVC (Requires a concrete cap, see SR-209 and SR-215)

Gray Polyvinyl Chloride (PVC) electrical grade, Schedule 40 conduit for direct burial installation.
Conduit to be manufactured to NEMA TC-2 specification.
Rated for direct burial and 90º C conductors.
* All bends and sweeps shall be factory bent. (36"x90º, 36"x45º for vertical and 12.6' x45º for horizontal)

OR

2 1/2" Conduit - HDPE, "Wave- Rib" or "Dura · Line" Flexible Continuous Duct (Coiled / Reeled) - After April 1, 2005

Conduit shall be Schedule 40, red in color (interior and exterior).
Rated for direct burial and 90ºC conductors.

2 1/2" Service Conduit DB-120 exception

DB-120 conduit will be allowed for the STRAIGHT runs in service laterals (transformer / pedestals to the meter) as long as the service length is 250' or less, bends in the conduit run are 270º or less, and connectors and sweeps are Schedule 40 electric PVC. The meter panel is to be on the same side of the building as the TEP/UES equipment indicated by the Design Department. Note: This DOES NOT apply to cross trenching installations (see SR-304) for details.

DUCT AND CONCRETE INSTALLATION

4" & 6" Conduit - PVC

Grey Polyvinyl Chloride (PVC) electrical grade, schedule 40 for direct burial installation. Conduit to be manufactured to NEMA TC-2 standards. Conduit shall be rated for use with 90 degree C conductors.

Red, High Density Polyethylene, (HDPE) Smooth-Cor flexible conduit designed for direct buried or concrete encased burial. Conduit manufactured under ASTM D-3350 / D-638 / D-1238 / D-792 and D-1693 specifications. Conduit uses Key-Lock couplers and O-Rings for joining system. Standard lengths are 20 feet. Adapters are available for bell end or spigot end PVC, cut PVC or pipe thread. Approved sizes: 4" and 6" HDPE conduit. (5" conduit no longer approved).

4" and 6" SDR-13.5 (ASTM D-3035) Arnco or Dura-Line (HDPE) Solid red exterior and interior is to be used for directional boring when crossing under a road (if a street cut is not permitted or desired). Note: Up to 12 weeks lead time required if not in stock. Also approved for directional boring applications are the following manufacturer part numbers for the Bore-Gard Trenchless Raceway from Prime Conduit Inc : BG440SP-020 (4") and BG640SP-020 (6").

4" & 6" CONDUIT SWEEPS

Schedule 40 electrical PVC 4" X 36" X 90°, 6" X 48"x90 °, 6" X 48"x45° sweeps will be approved for vertical installation into TEP equipment only. Steel 4" X 36" X 90°, 6" X 48"x90 °, sweeps are to be utilized for attachment to power poles only. Rigid Aluminum 6" X 48"x90° sweeps are to be utilized for 46kv pole riser installations.

TEP reserves the right to reject any of the above ducts which show signs of environmental damage. Solvent cemented joints shall be made according to the manufacturer's recommendations, using cements meeting the requirements of ASTM D2564 for PVC duct.

CONCRETE STRUCTURES

All concrete for structures shall be of such mixture that it will work readily without segregation and will provide a minimum strength of 3000 lbs. per square inch at 28-day test. All concrete surfaces or inner faces of structures shall be clean and smooth. Finished floor surfaces shall be steel troweled smooth and level. All edges must be chamfered. All concrete shall be reinforced with deformed billet steel conforming to ASTM A615, Grade 60 as shown on the appropriate SR drawing and shall be thoroughly worked around reinforcing steel and into corners of forms. The customer or his contractor shall furnish test cylinders as requested by TEP for the purpose of materials testing. All concrete shall conform to proper slump tests of not less than 2-inches nor more than 4-inches, using a standard 12-inch cone. In addition TEP may request a copy of the concrete delivery invoice to verify the ordered formula strength of the concrete mix. Test cylinders must reach 75% of the 3000 lbs. PSI rating or equivalent 21-day curing period before any equipment will be installed.

CONCRETE DUCT ENCASEMENT

Duct encased in concrete shall have a 3" minimum / 5" maximum encasement and/or cap as shown in the appropriate SR drawing. All concrete for duct coverage and protection shall provide a minimum strength of 2000 lbs. per square inch at 28 days and a minimum slump of 6 inches and a maximum of 8 inches. Note: All 46kV circuits (3 six inch ducts per circuit) will require concrete encasement the entire underground run. Red concrete dye is required.

SPARE DUCTS

TEP will not guarantee the condition of, or the responsibility for, any ducts installed by any contractor for future use in the installation of an underground distribution system. TEP will assist in locating ducts stubbed for future use and will accept responsibility and ownership at such time as cable has been installed in the conduit system and energized. Information pertaining to sleeves see SR-210.

SMOOTH COR ADAPTER

SMOOTH COR TO PVC SWEEP

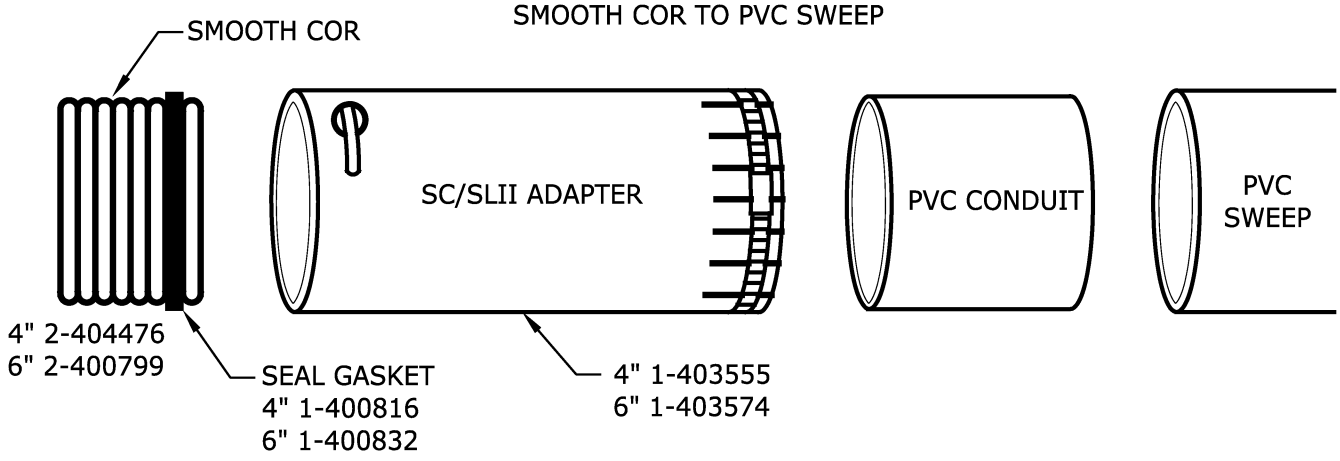

SMOOTH COR TO GALVANIZED STEEL
(POLE RISER OR SVC ENTRANCE)

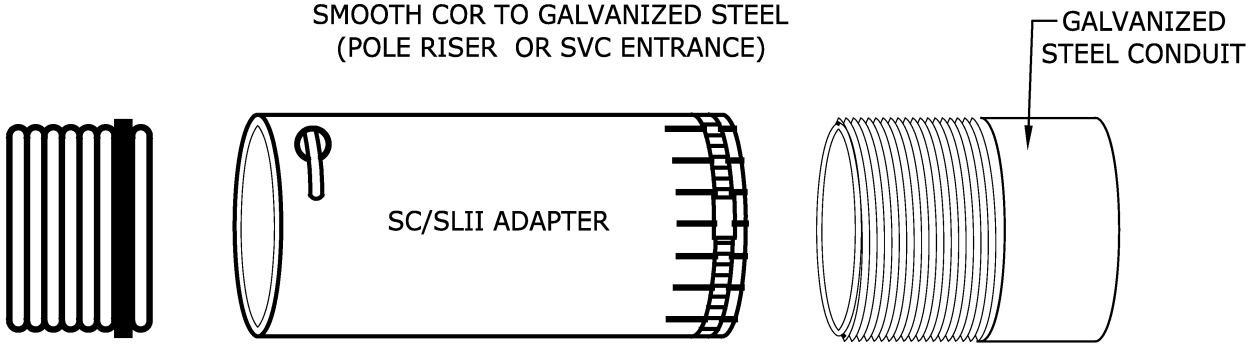

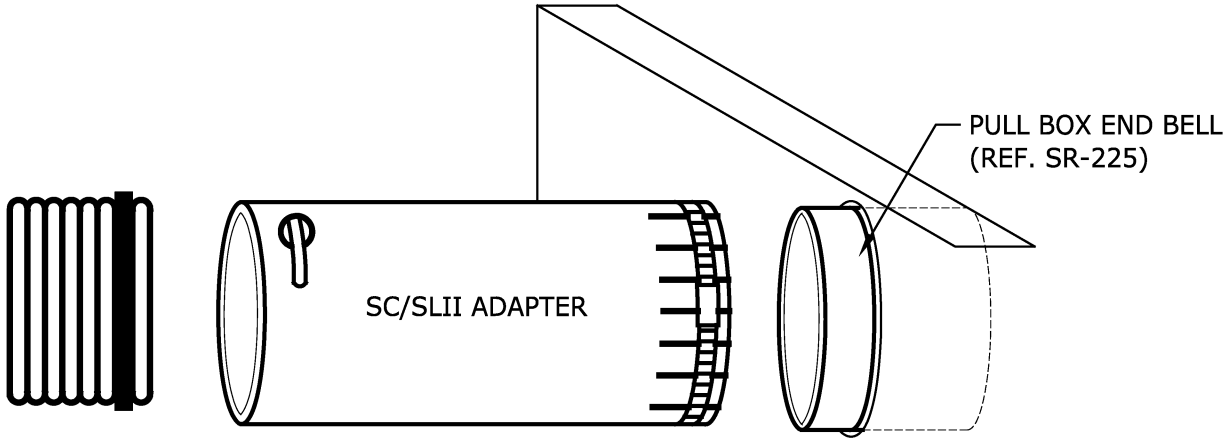

ADDITIONAL PARTS:

4" KEYLOCKS 2-400815
6" KEYLOCKS 2-400831
GASKET LUBE, QUART 1-402813

Use: Acceptable soil conditions for cable bedding.

TRENCH, BACKFILL

SCOPE

This Standard outlines the acceptable soil and rock mixtures that may be utilized to provide bedding and trench backfill over and around TEP/UES installed primary, secondary, and service cables in polyethylene coilable duct (cable in conduit) and HDPE or PVC duct. For this discussion, "bedding" is defined as the soil mixture surrounding the duct, 6" on top and 3" on sides. "Backfill" is defined as the remaining soil mixture required to fill the trench excavation.

SPECIFICATION

All "bedding" material shall pass the following gradation:

Sieve Size	Percentage Passing Sieve	Plastic Index
1.5"	100	Max. 8
1"	90-100	
No. 8	35-80	
No. 200	0-8	

Should the existing soil conditions not meet this condition, then material meeting this requirement shall be imported for use in bedding of the cable in duct. Backfill is the material placed on top of the bedding starting a minimum of 6" above the duct. Bedding is the material in which the cable in duct is placed and extends a minimum of 6" above and 3" to the side of the duct. When imported bedding is required, the trench shall be overexcavated so as to provide a minimum of 6" of bedding under the duct and maintain the proper depth requirements for the cable in duct.

In either case, the trench floor shall be relatively smooth, with no loose or protruding rock and/or organic material (cactus, roots, boards, etc.).

From the point 6" above the duct where the bedding ends, the trench may be backfilled with excavated material, provided there are no rocks larger than 8" in any dimension be allowed in the trench. All backfill shall be compacted to meet or exceed local ordinances or other requirements. In no case shall compaction be less than the 95% relative to a Standard Proctor Density (ASTM D698). It shall be placed in a manner that will not damage the conduit or its substructure or allow future subsidence of the trench or substructure.

TEP/UES reserves the right to require density (compaction) testing to verify conformance with the above referenced standard. If required, density (compaction) testing shall commence approximately two feet above the top of the conduit or duct and continue to the base of the roadway structural section or the easment surface, as applicable. At a minimum of each reach of conduit or duct installed, one density test shall be taken at every two feet of vertical height of trench backfill between pull-boxes between pull-boxes or other structures, or one every 300 feet, whichever is shorter.

SITE PREPARATION FOR EQUIPMENT AND PADS ON SLOPING GRADES

1. SCOPE:

The intent of this standard is twofold; first, to provide a clear and level work space for the operation and maintenance of pad-mounted equipment, and second, to prevent erosion and soil deposition problems when pad-mounted equipment is placed on sloping grades. This standard applies to the site preparation for the following; 1Ø and 3Ø transformers, pedestals, J10, J30, J1, J2 and F2 cabinets, PMH / PME switchgears and capacitors.

2. OPERATING WORK AREA:

A 10-foot permanent clear work area is required in front of the pad-mounted equipment for hot-stick operation. An effort should be made to keep this 10-foot area to a flat grade. If this is not possible the grade shall be no greater than a 1-foot vertical rise to a 9-foot (drop 4" in 3') horizontal run. (See Fig. 1 below)

3. REQUIREMENTS FOR RETAINING WALLS:

Where the slope of the land adjacent to the sides and rear of the easement area is greater than a 1-foot vertical rise to a 3-foot horizontal run a retaining wall shall be constructed to prevent erosion or soil deposition. Walls are to be located outside of the easement. (See Fig. 2 through Fig. 8)

4. REQUIREMENTS FOR SCREEN WALLS:

The customer can place a screen wall around a transformer, provided the wall is kept outside of the easement for the transformer. A clear area, 8 feet deep, should be provided in front of the transformer door/s to allow for a proper operating work area. A gate the width of the easement may be placed in front of the transformer to completely screen the transformer, providing all other clearance requirements are met. The gate is not to be locked, unless arrangements are made for a TEP lock with access. For three phase pad-mounted transformer the screen wall must be at least three feet away from any extending part of the transformer.

Fig. 1

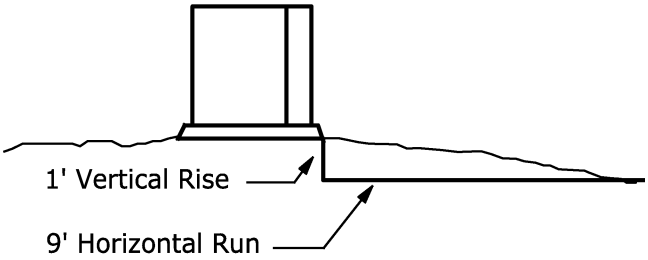

Fig. 2

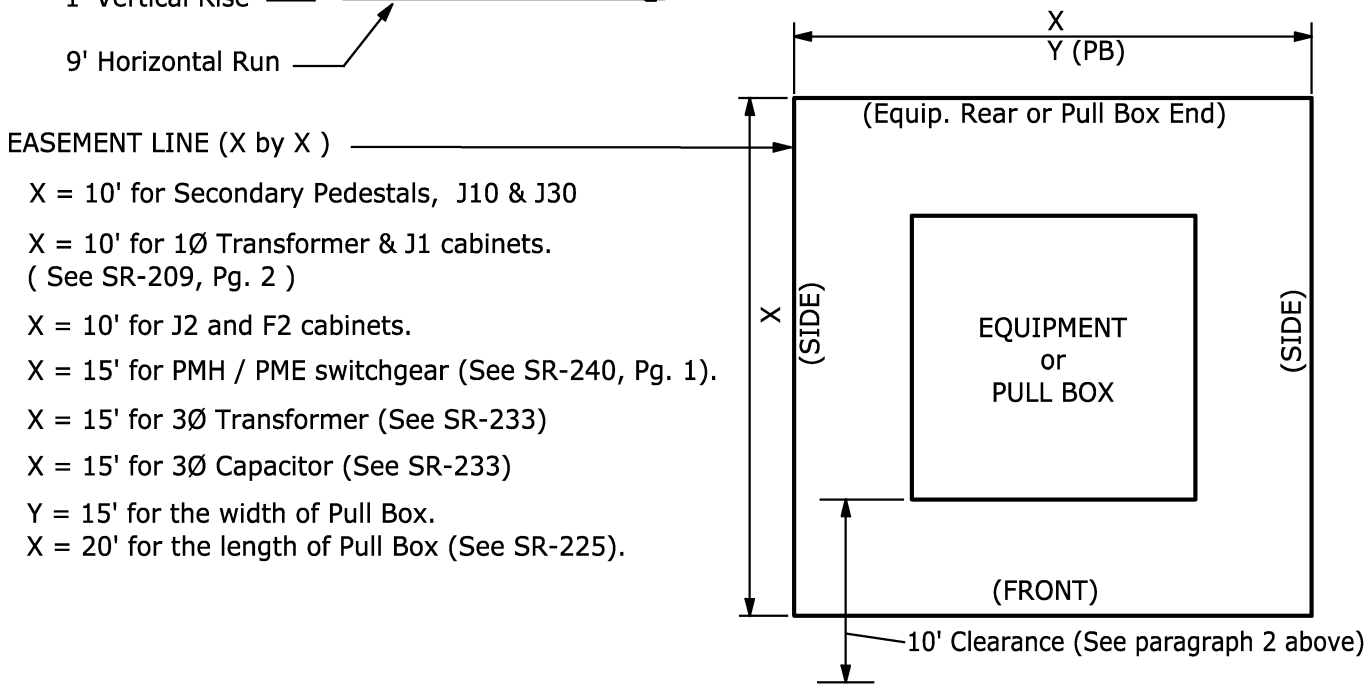

SITE PREPARATION FOR EQUIPMENT AND PADS ON SLOPING GRADES

Fig. 3

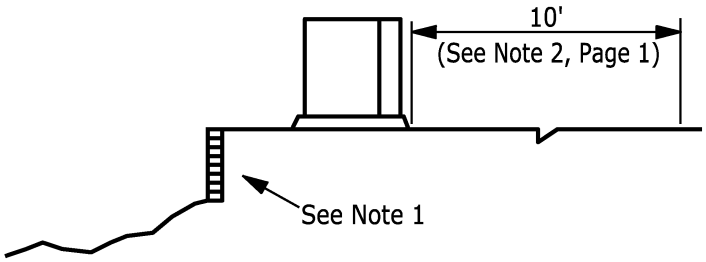

Fig. 4

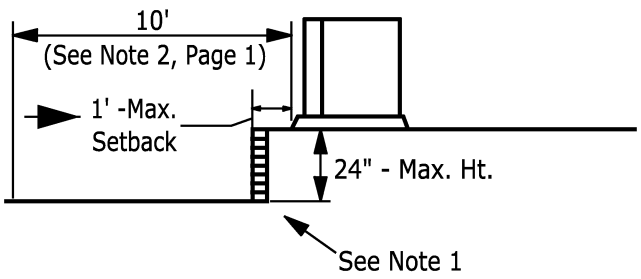

Fig. 5

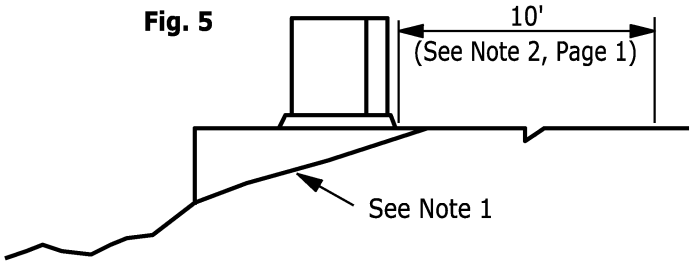

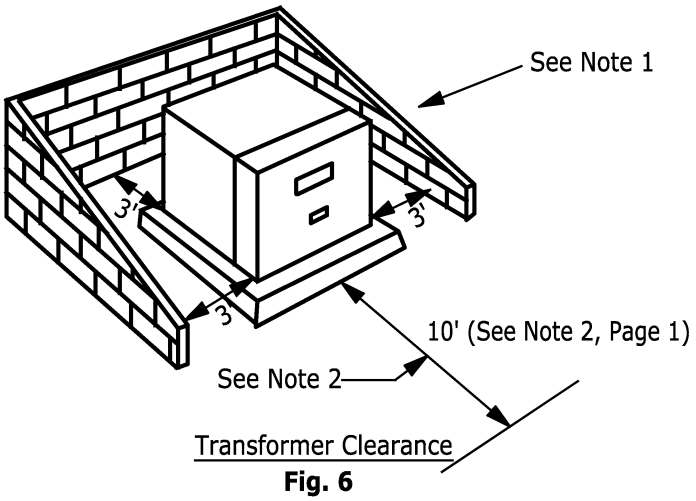

Fig. 6

Fig. 7

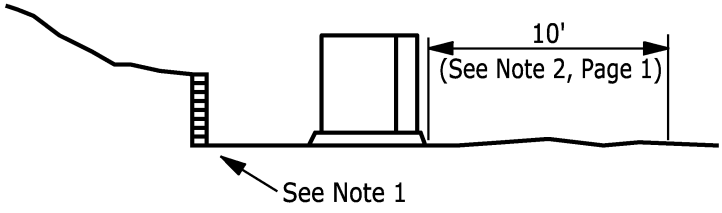

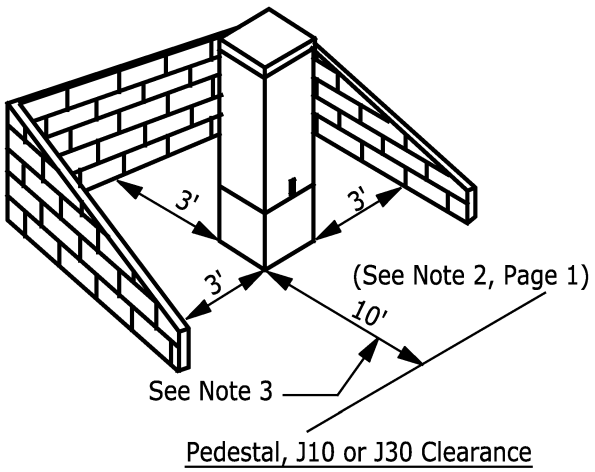

Fig. 8

NOTES:

1. Install retaining wall (concrete block/solid concrete or equivalent) as necessary.
2. The area in front of 1Ø Transformer Pads must be left suitable for the future trenching access required for new services.
3. Working clearance needed from any wall or obstruction.

TRENCHING UNDERGROUND DISTRIBUTION

ALL UNDERGROUND DISTRIBUTION DESIGNS ARE TO BE A CUSTOMER PROVIDED TOTAL CONDUIT SYSTEM INSTALLATION.

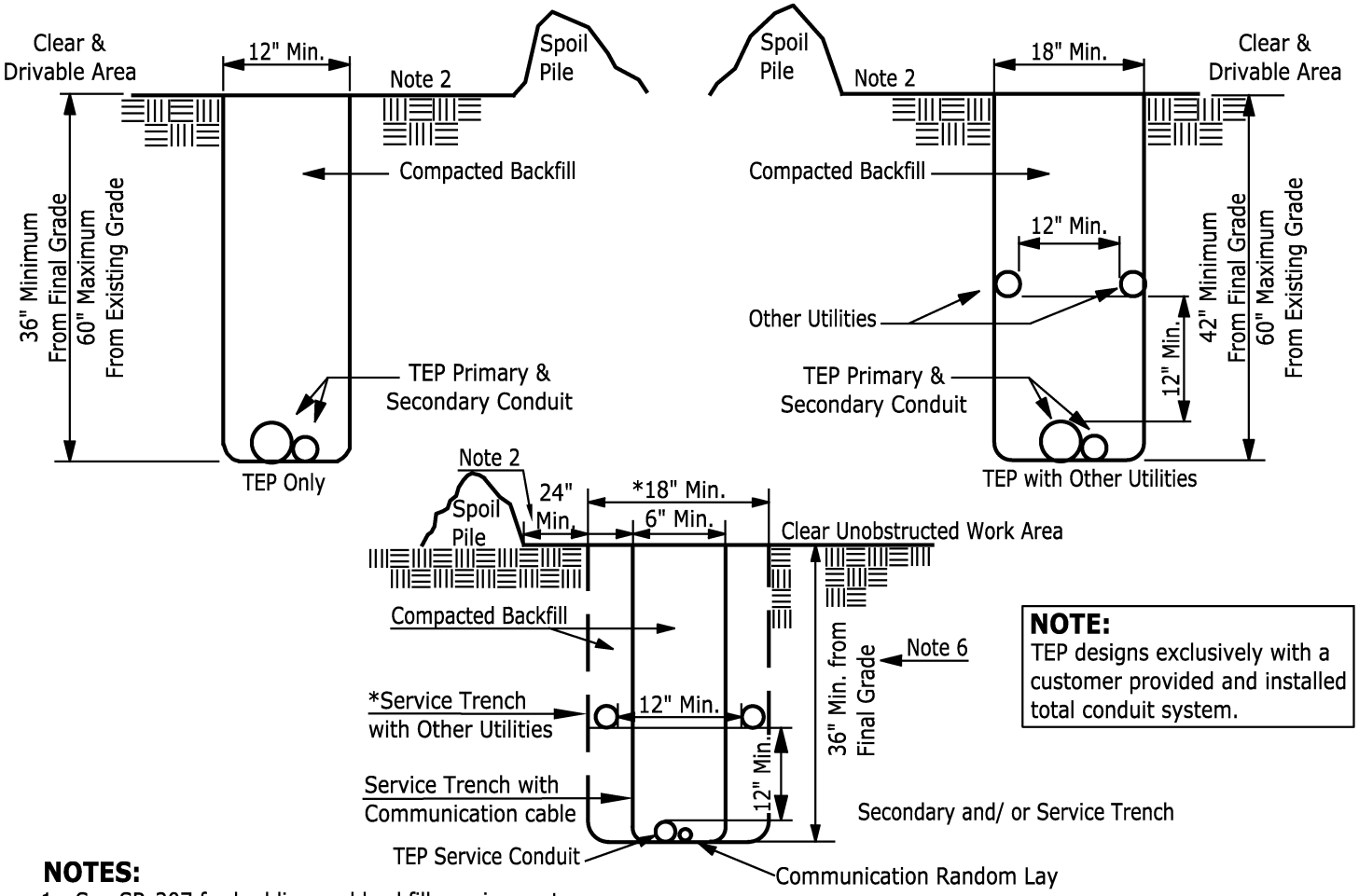

NOTE:
TEP designs exclusively with a customer provided and installed total conduit system.

NOTES:

1. See SR-207 for bedding and backfill requirements.
2. Where possible, the trench spoil shall be placed to the opposite side of the access to the trench. Adequate protection shall be provided to protect employees from loose rock or soil that could pose a hazard by falling or rolling into the excavation. Protection can be provided by placing and keeping such materials at least 2 feet from the edge of the excavation, or by other means that provide equivalent protection. This 2 ft. area shall be level and free of debris to permit safe footing during inspection.
3. On-site inspections by TEP are required for open trench, bedding, and shading. Call 918-8300 to schedule inspections.
4. A 2 ft. x 5 ft. bell hole must be provided when modifying an existing CIC installation. Bell holes for service trenches must comply with the requirements of SR-312 and SR-210 where applicable.
5. The minimum horizontal radius in a trench prepared for installation of wave rib conduit system shall be 4 ft., and 12'.6" on a schedule 40 PVC continuous conduit system.
6. Service trenches for the continuous conduit system must be 36 inches in depth.
7. Under no circumstances is a trench to be dug closer than 3 ft. to a down guy anchor rod.
8. See SR-210 for sleeve installation where a trench can not remain open.
9. The service conduit shall be installed into the equipment sites at the same time when the primary and/or secondary conduits are installed. All conduits are to be tied up per the equipment detail, and prior to calling for the trench and conduit inspection.
10. Do Not trench under TEP/UES underground equipment without the presence of an Access Crew. For conduit installation into existing underground equipment, contact Access at 918-8300 (761-7952 UES) to assist with the conduit placement.

TRENCHING, URD
EQUIPMENT PLACEMENT

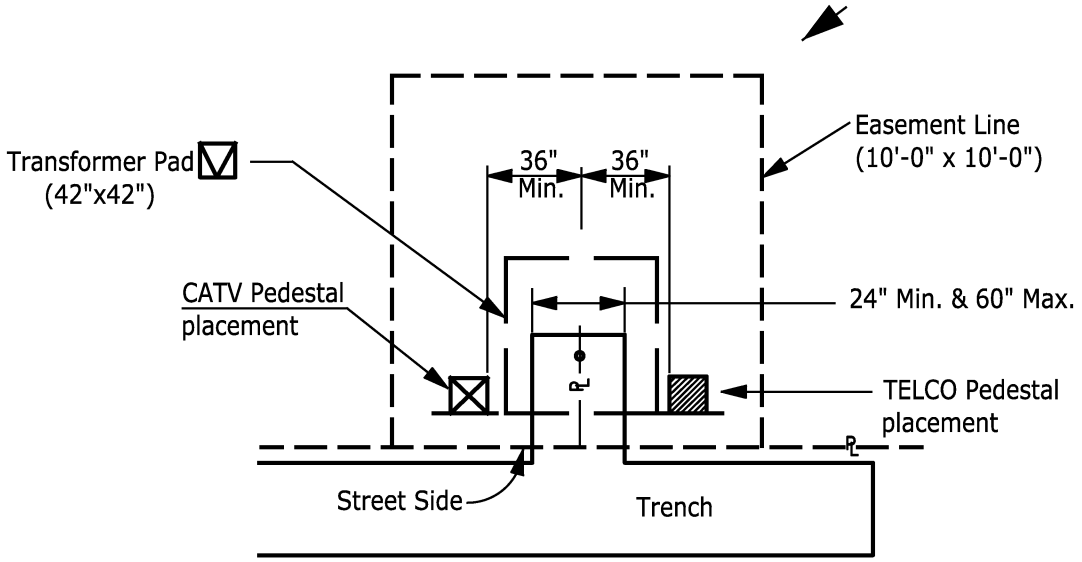

OFFSET EASEMENT - TRANSFORMER PAD

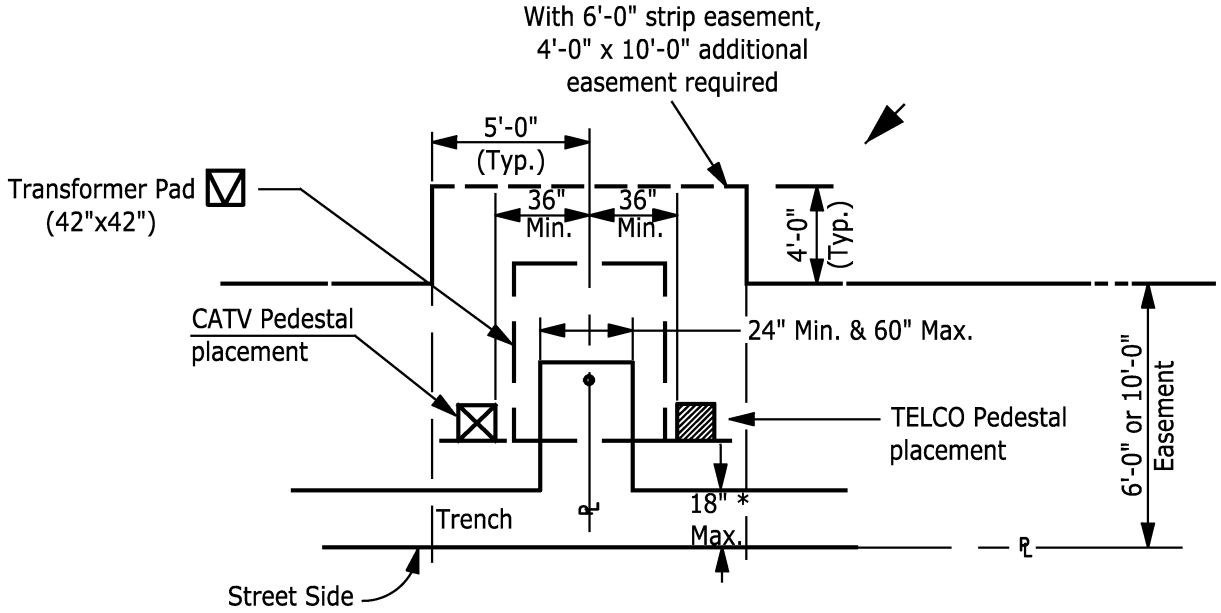

STRIP EASEMENT - TRANSFORMER PAD
*For 6'-0" strip easement only

TRENCHING, URD
EQUIPMENT PLACEMENT

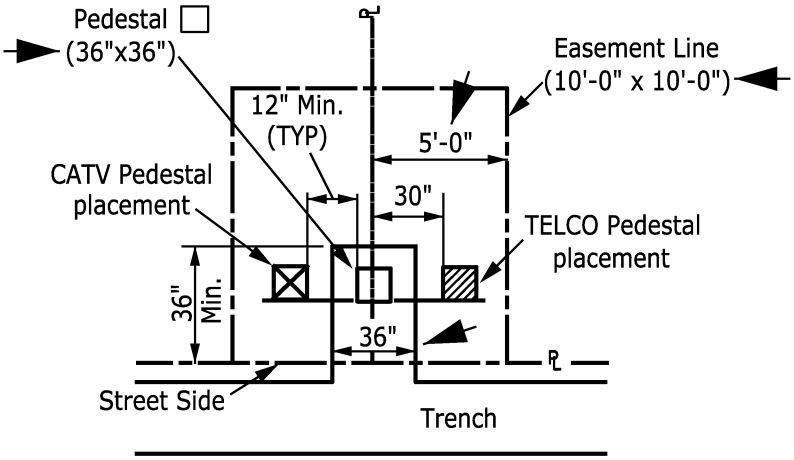

OFFSET EASEMENT - PEDESTAL

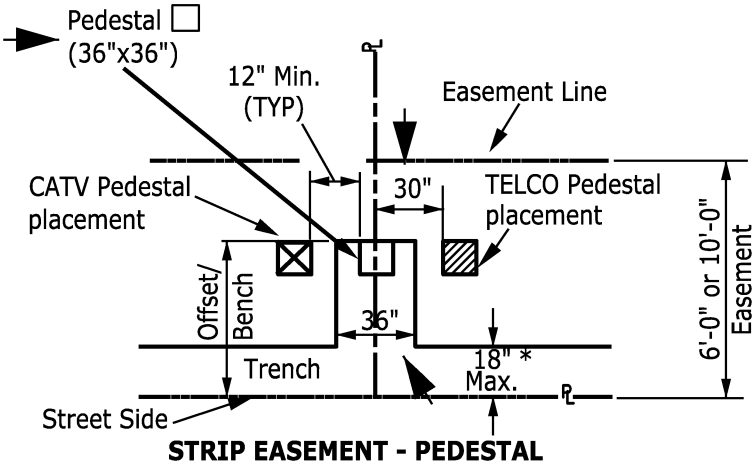

STRIP EASEMENT - PEDESTAL

* For 6'-0" strip easement only

TRENCHING, URD
EQUIPMENT PLACEMENT

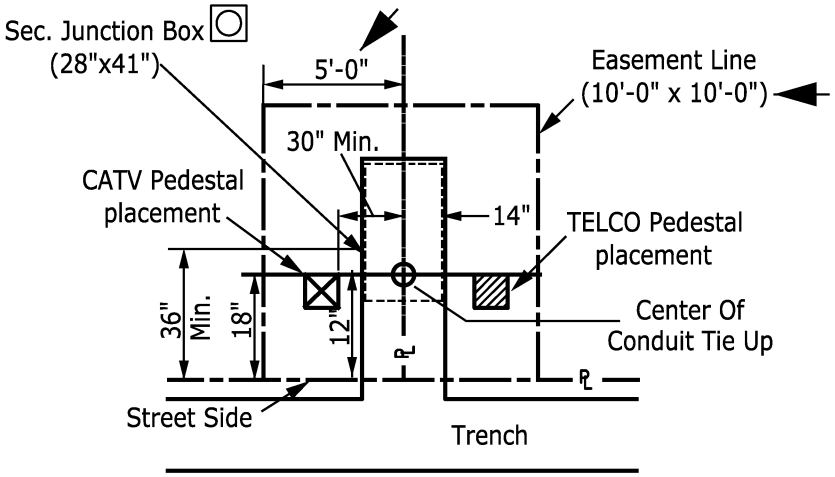

OFFSET EASEMENT
OPTIONAL SECONDARY JUNCTION BOX

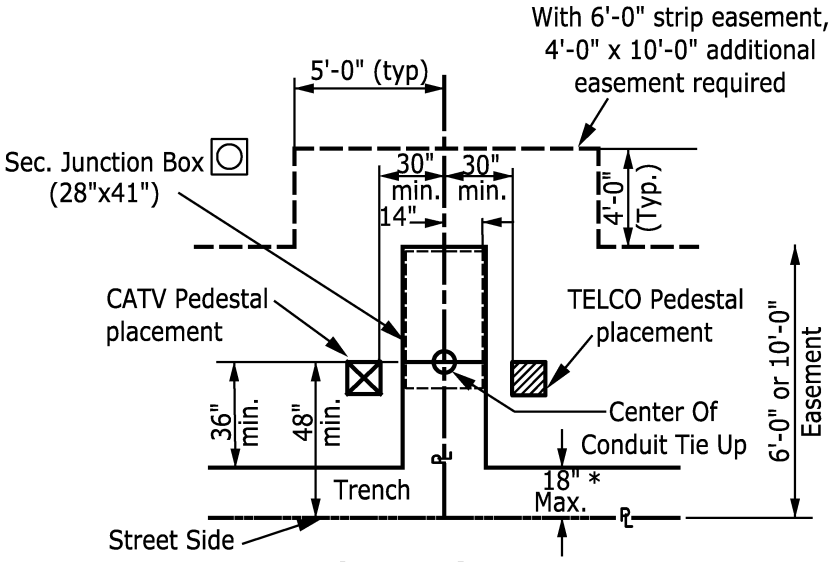

STRIP EASEMENT
OPTIONAL SECONDARY JUNCTION BOX
* For 6'-0" strip easement only

TRENCHING, URD
EQUIPMENT PLACEMENT

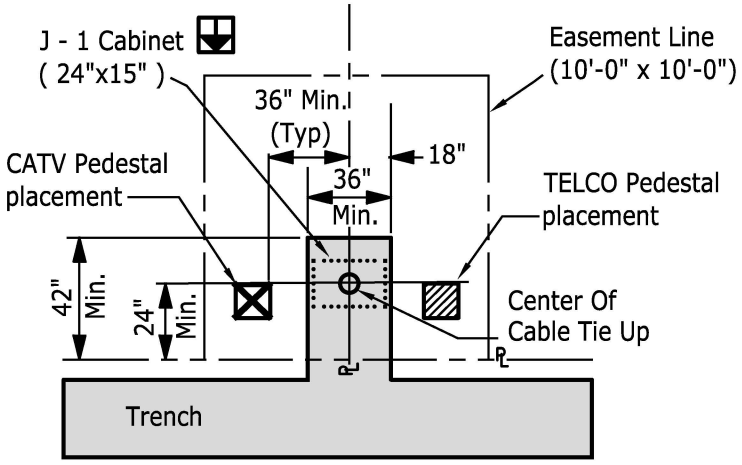

OFFSET EASEMENT
J - 1 CABINET

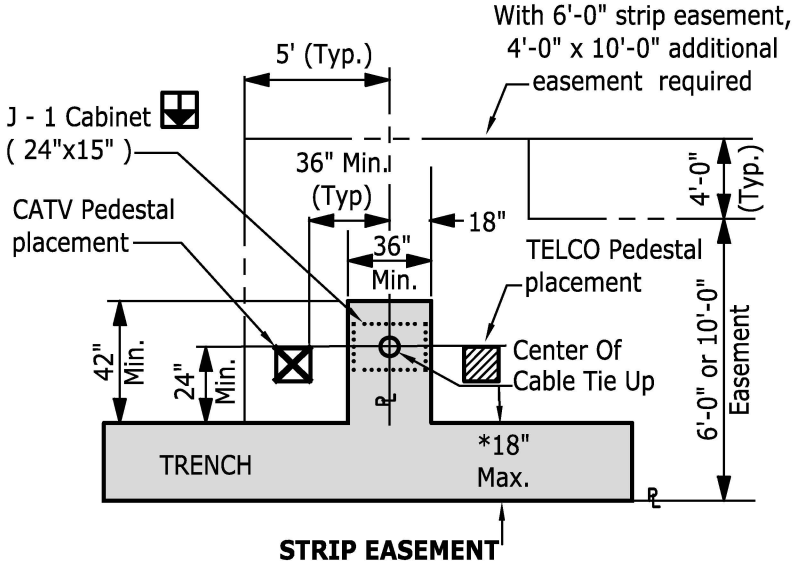

STRIP EASEMENT
J - 1 CABINET

* For 6'-0" strip easement only

CONDUIT PLACEMENT
EXISTING SINGLE PHASE
STEEL PEDESTAL

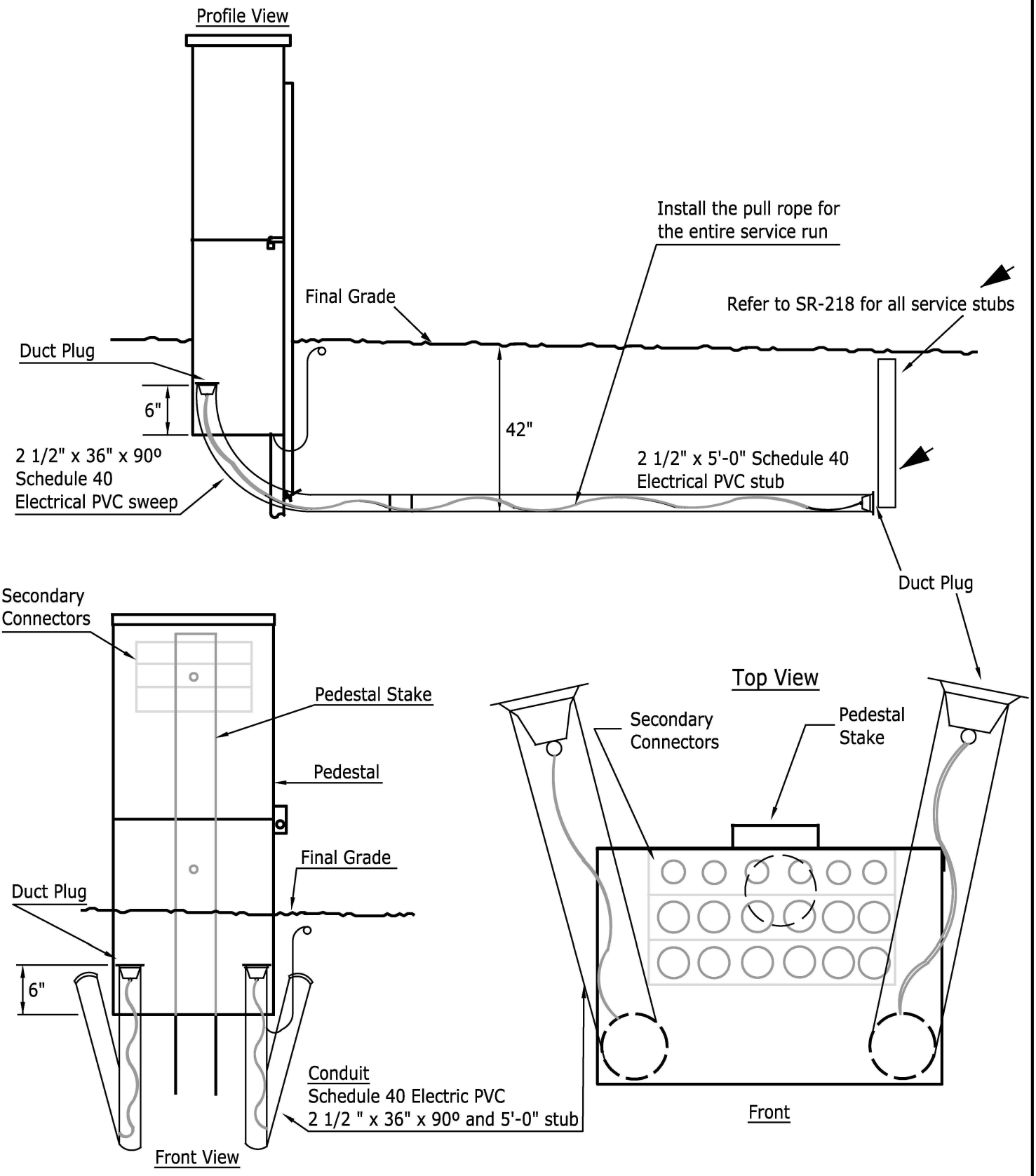

TEP Tucson Electric Power	INITIATED BY	GC	REVISION NO.	17	SR-209 Pg. 6 of 9
	ESR COMM.	8-06	ESR COMM.	7-12	
			EFFECTIVE DATE	8-12	

CONDUIT PLACEMENT TIE UP
PRIMARY/SERVICE URD

Service Conduits 2 1/2" / 4"
for 1 to 2 lot applications.

4" conduit systems require the installation of Smooth - Cor conduit system.

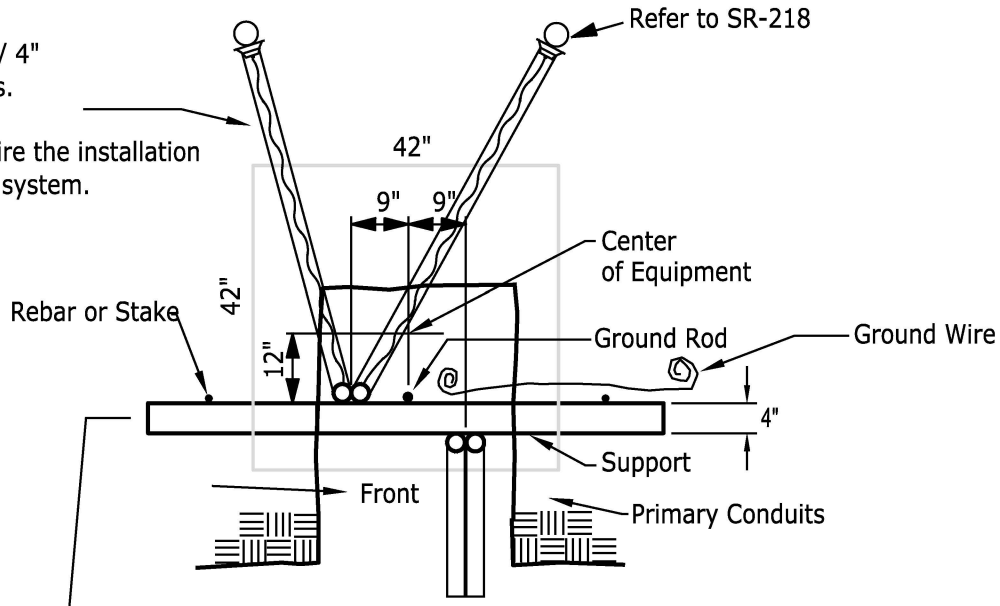

The customer to provide the tie-up support & ground wire for total conduit installation

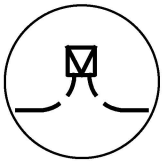

Pad Mounted Transformer
Plan View

Schedule 40 PVC 3'-0" x 90º & a 5'-0" straight stick is preferred for the service stub out. The stub out is to be in place for the primary trench conduit inspection.

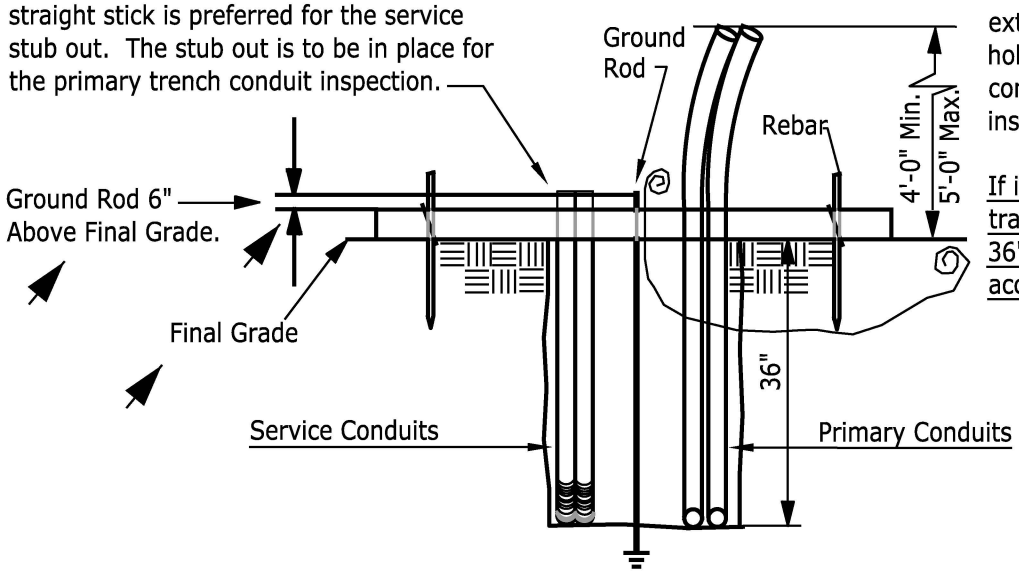

If using Wave-Rib conduit, leave 4 to 5 extra feet to assist with shaping and holding the conduit in place. Trim the conduit after the transformer backfill inspection has passed.

If installing conduit into an existing transformer, a schedule 40 2 1/2" x 36" x 90° will be required. Call for an access appointment at 918-8300.

Pad Mounted Transformer
Front View

Note:
Ground Rods are Not Permitted to be cut under any circumstance. If soil conditions prohibit driving the ground rod per the SR, contact TEP's design department.

TRENCHING, URD EQUIPMENT PLACEMENT FOR CONDUIT INSTALLATION

NOTES:

1. EASEMENT / EQUIPMENT IDENTIFICATION

Customer is to provide property pins and / or swing ties (stakes) to the center of equipment at the UG equipment (Transformer, Pedestal, J-10, J-1, J-2, etc.) location. These pins / stakes will be in place for the trench / conduit inspection and backfill / mandrel inspection.

2. CONDUIT PLACEMENT / TRANSFORMER PAD SITE PREPARATION

A) Pad and trench sites shall be level and at final grade before calling TEP for a trench / duct inspection. Driven ground rod to be 6 inches above final grade.

B) Customer to utilize the approved TEP conduit template (purchased through TEP) during the backfill process to ensure proper conduit and ground rod placement final grade. Duct plugs are required for all conduits (no duct tape).

C) After the conduits (SR-205) and ground rods are in place, the customer is to install a #6 solid soft drawn copper conductor for Telco bonding from the ground rod 2 ft. above the pad (at the ground rod), 12 inches away from the front of the pad and 36 inches to the right of the pad site. Bury the conductor 12 inches below final grade and coil up approximately 2 ft. of conductor. With the template in place, pour concrete on the conduit (see SR-205 & 215, Pg. 1 of 2) if using PVC and call for an inspection. After passing the inspection, backfill and compact (95%), level the equipment site and install the transformer pad. The conduit shall be cut 1 inch above the top of the pad and covered with the appropriate duct plug. See SR-208 for equipment site preparations, including sites with slopes.

D) The customer to call for a transformer pad site, pedestal site, and mandrel inspection, upon approval the customer will pour a slurry of concrete (1/2 inch thick) inside the entire opening for rodent protection.

3. PEDESTAL SITES

TEP to provide the pedestal. The customer is to excavate and install per SR-209 page 9. After the conduits (SR-205) are in place, the customer is to install a #6 solid soft drawn copper conductor for Telco bonding from 2 ft. above the sub grade (next to the right side of the conduits), 12 inches away from the front of the pedestal and 24 inches to the right of the equipment site. Bury the conductor 12 inches below final grade and coil up approximately 2 ft. of conductor.

4. J-1 CABINET SITES

TEP to provide the subsurface base. The customer is to excavate and install per SR-235. Install ground wire per note 3 on this page.

5. J-2 CABINET SITES

TEP to provide the subsurface base. The customer is to excavate and install per SR-234.

6. SECONDARY JUNCTION BOX SITES (J-10) - CUSTOMER OPTION (in place of pedestals)

The customer to provide and install the 20K rated J-10 box per SR-209 page 9. Install ground wire per note 3 on this page.

A) After the conduit (SR-205) is installed, the customer to provide, install and level an approved TEP secondary junction box (see below) so the top of the box is 1 inch above final grade. Place the lid on the box.

B) Approved secondary junction box (17"x30"):

Armorcast Products Co. - Cat. No. 6001640-AS
CDR Systems - Cat. No. PA30-1730-18S
Christy Concrete Products - Cat. No. FL36BOX18
Electrimold Inc. - Cat. No. ECAA-173018-100
New Basis - Cat. No. FMA173018TN20001P212N00000
Quazite - PT1730BA (Box), PT1730CA00 (Cover)

TEP will furnish the transformer pads, pedestals, and ground rods to the job site at the customers' request. Please give TEP a 2 week notice and specify a contact name, phone number and the material staging area. It's the customers' responsibility for the care of this material. The customer must sign for the delivered material. Any lost, or damaged material will be the responsibility of the customer to replace with approved TEP material.

Note: Ground Rods are Not Permitted to be cut under any circumstance. If soil conditions prohibit driving the ground rod per the SR, contact TEP's design department.

CONDUIT PLACEMENT PRIMARY, SECONDARY, & SERVICE

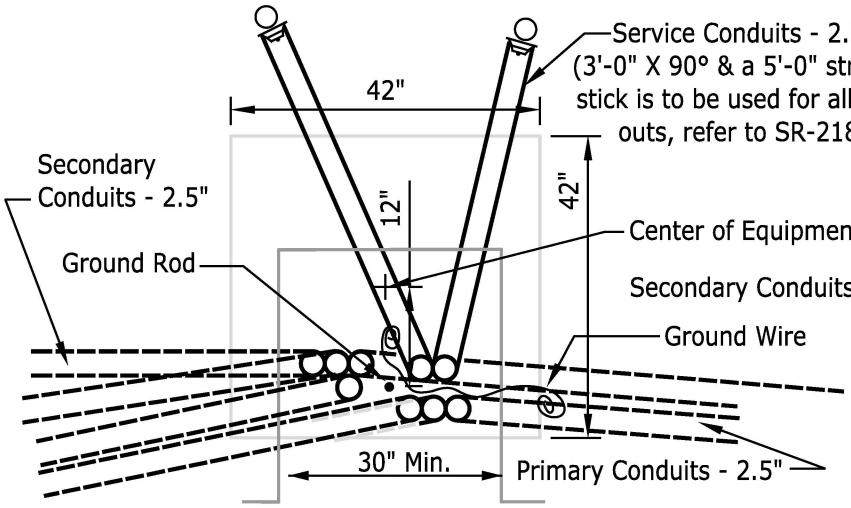

Pad Mounted Transformer
Plan View - Strip Easement

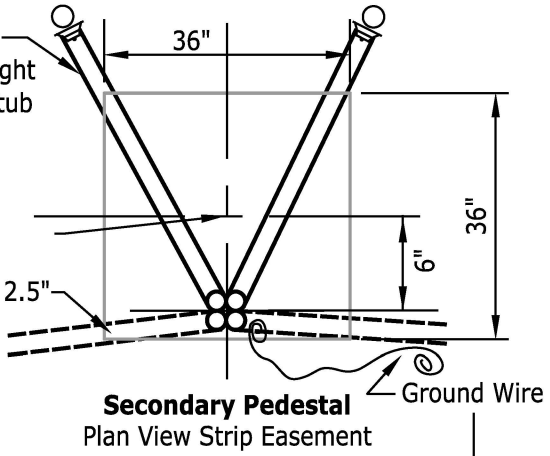

Secondary Pedestal
Plan View Strip Easement

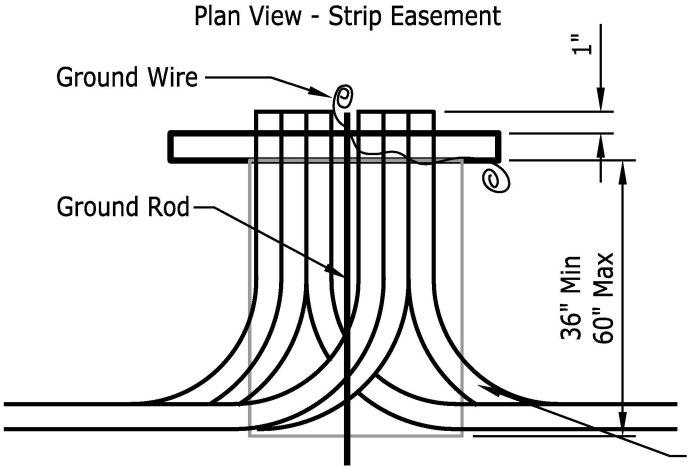

Pad Mounted Transformer
Front View - Strip Easement

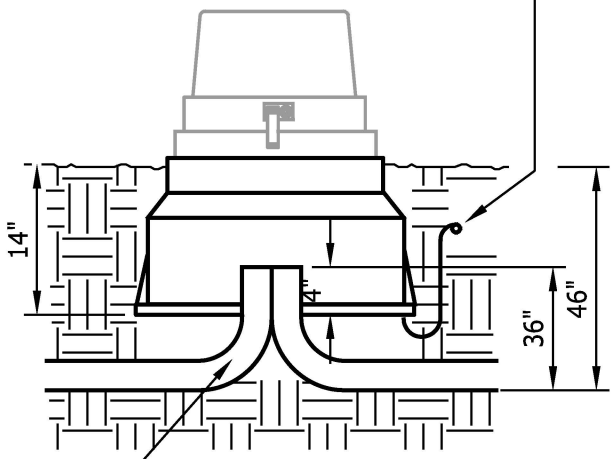

Secondary Pedestal
Front View Strip Easement

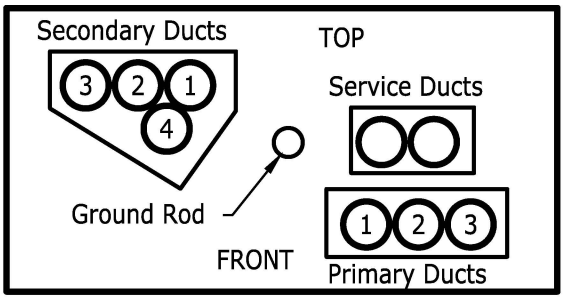

Transformer Template

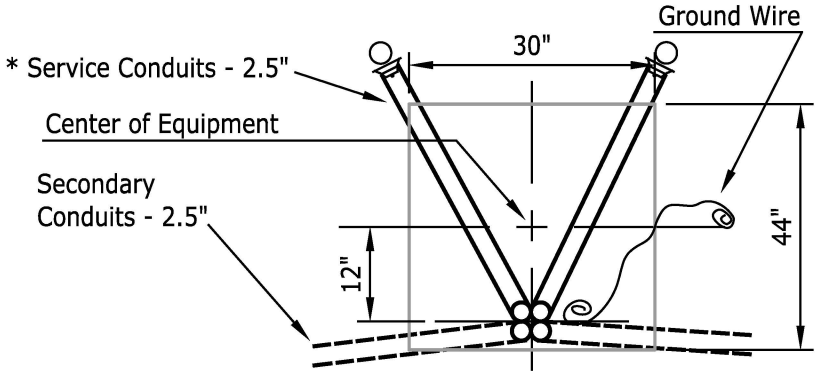

Secondary Junction Box (Customers Option)
Plan View & Front View

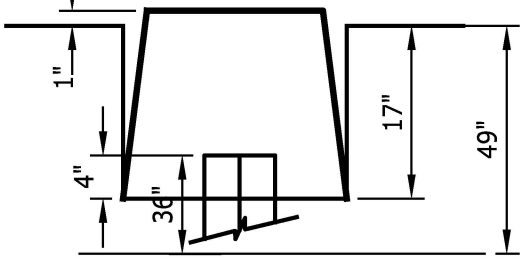

Note:
Ground Rods are Not Permitted to be cut under any circumstance. If soil conditions prohibit driving the ground rod per the SR, contact TEP's design department.

TEP Tucson Electric Power / UniSourceEnergy SERVICES SANTA CRUZ COUNTY	INITIATED BY	GC	REVISION NO.	4	SR-209 Pg. 9 of 9
			ESR COMM.	3-16	
	ESR COMM.	6-05	EFFECTIVE DATE	4-16	

USE: Customer furnished sleeve when trench can not remain open. To be completed as continuous duct system.

SLEEVE INSTALLATION

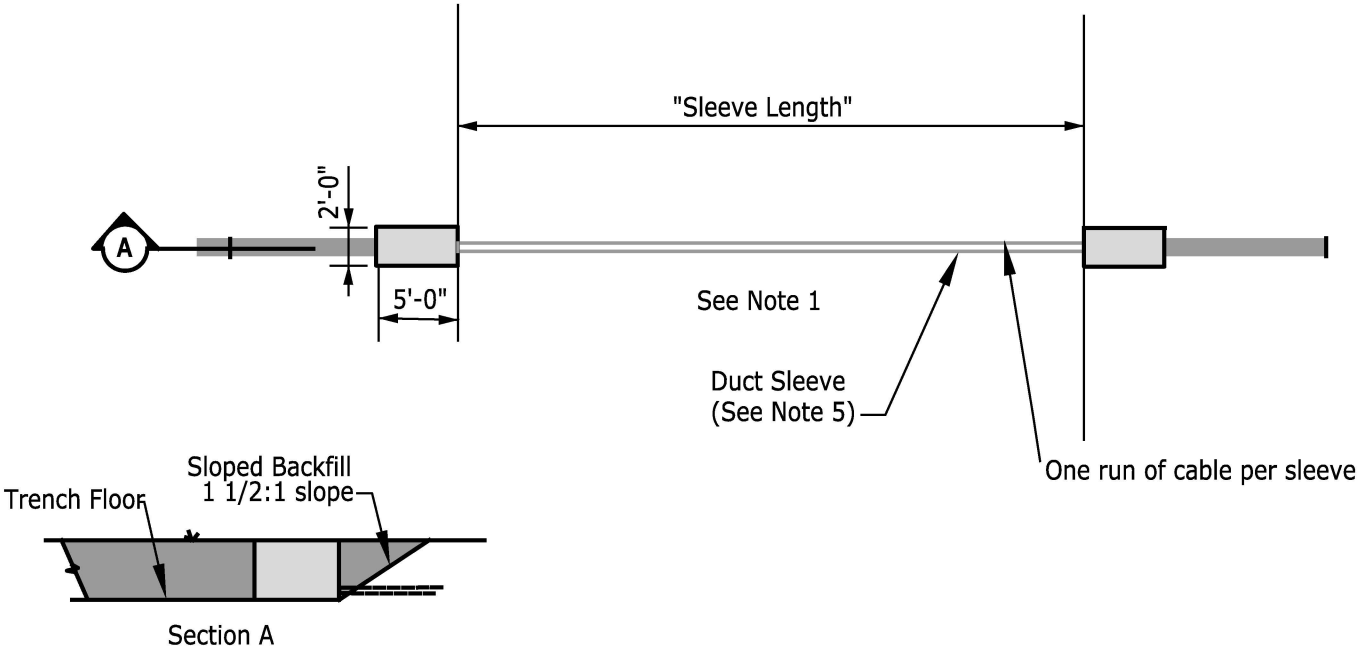

NOTES:

1. Where a duct system is installed under roads, driveways, drainageways, etc. for the purpose of cable installation. A 2 ft. x 5 ft. bell hole must be dug at each end of the duct for inspection purposes. There is to be no bending radius in the sleeve.
2. Open ends of duct shall be plugged to keep debris, mud and dirt from entering.
3. The design must comply with TEP cable pulling requirements, which require layout and approval by the Design department.
4. See SR-209, SR-215 and/or SR-312 for trenching specifications.
5. See SR-205 for approved duct types and open trench installation. If a direct bore is required, approved HDPE conduit shall be used for the section bored. A boring profile report shall be provided upon request.
6. For existing 5 inch stubs and sleeves, the 5 inch conduit system may be continued after approval by the Design department. The intent will be to continue existing 5 inch duct until reaching a piece of equipment or junction where a transition can be made to 6 inch duct. Any 5 inch conduit used for this purpose must be Schedule 40.

TRENCH & DUCT ENCASEMENT
DRAINAGEWAY CROSSINGS

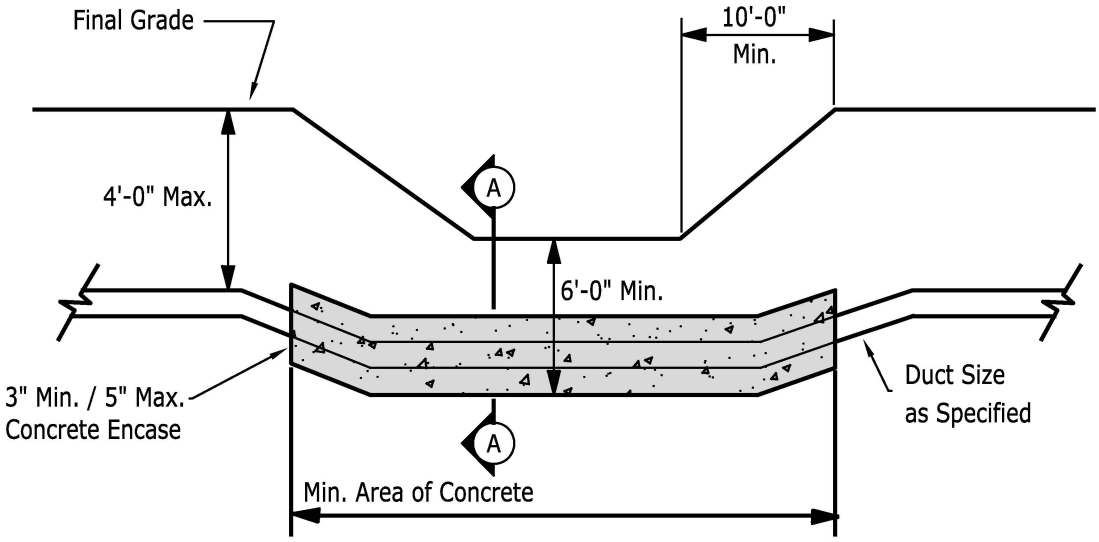

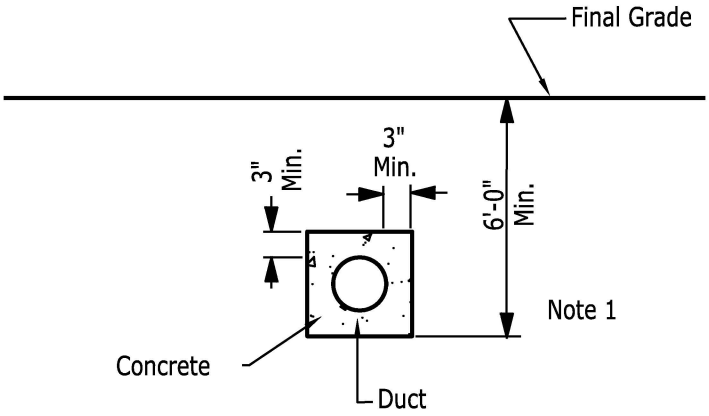

Section A-A

NOTE:

1. For duct installation requirements and concrete specifications, see SR-205.
2. For sleeve installation requirements see SR-210.

TEP Tucson Electric Power / UniSourceEnergy SERVICES SANTA CRUZ COUNTY	INITIATED BY	SC	REVISION NO.	7	SR-212 Pg. 1 of 1
			ESR COMM.	1-17	
	ESR COMM.	6-78	EFFECTIVE DATE	1-17	

TRENCHING 2.5", 4" AND 6" DUCT INSTALLATION

See SR-232, Fused Junction Cabinet (F2)
SR-233, Transformer 3Ø Pad-Mount
SR-234, Junction Cabinet (J-2)
SR-240, Box Pad, Switch
SR-235, Junction Cabinet (J-1)
SR-209, Transformer 1Ø Pad-Mount, Pedestal, & J-10

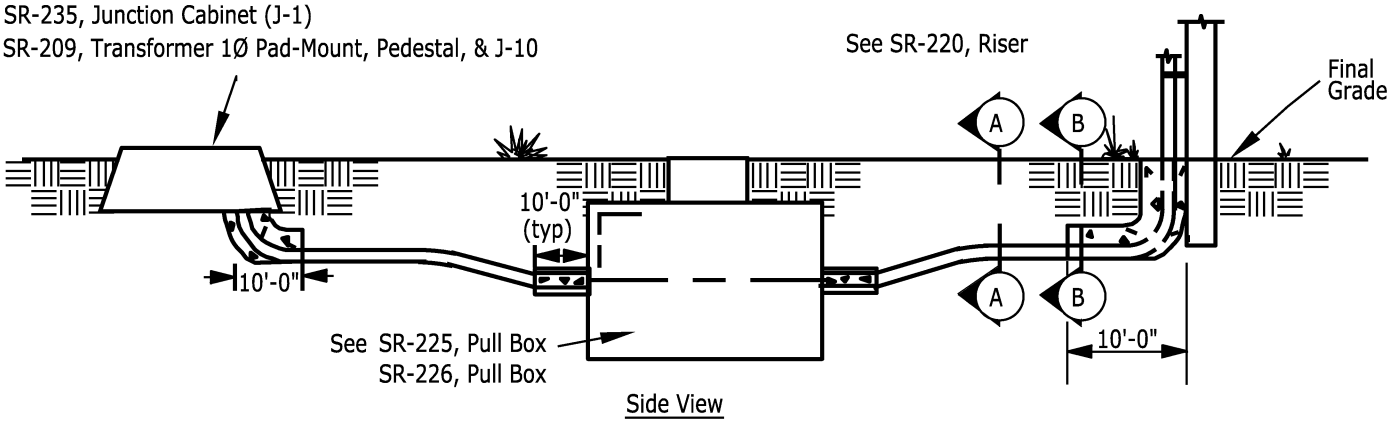

Side View

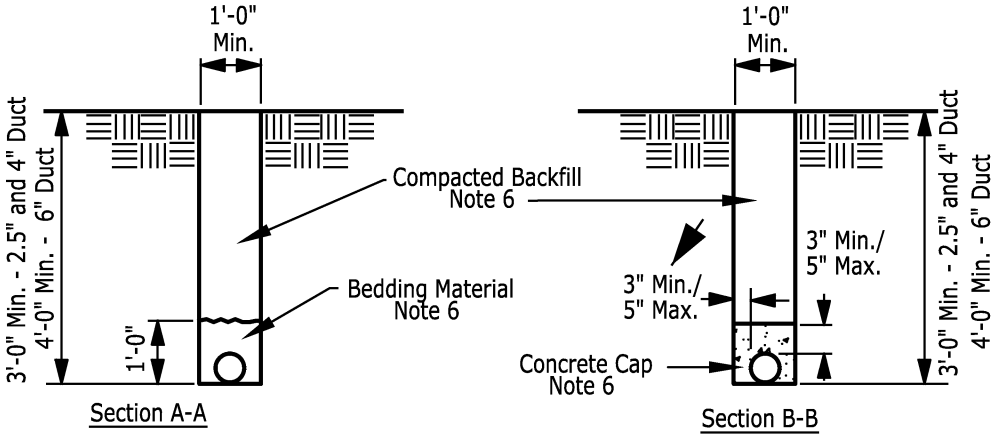

Section A-A

Section B-B

NOTES:

1. All horizontal radius bends in a duct system shall be 12.5' minimum for 2.5" (PVC), 4" and 6" (Smooth-Cor) ducts, with the exception of 2.5" Wave-Rib or Dura Line can be 4' minimum, however 12.5' is preferred. The vertical radius bends at risers and pad-mounted equipment shall be 3' for 2.5" and 4" conduits and 4' for 6" conduits. The total of all deflections shall not exceed 360° in any continuous duct run between outlets. Refer to reference standards above.
2. Horizontal and vertical direction changes in the duct at the coupling shall not exceed 5°.
3. All inactive duct ends shall be closed with appropriate duct plugs.
4. Joints shall form a continuous smooth interior surface between joining duct sections to prevent cable damage.
5. For duct and concrete encasement specifications, see SR-205. Concrete encasement of vertical sweeps required for duct runs of more than 150 feet in length or any length with a combination of 270° (or more) of bends, not to exceed 360°. Ducts entering pullboxes must be horizontial with the box and concrete covered 10' from the box.
6. For bedding and backfill material specifications see SR-207.
7. For mandrel pull see SR-205.
8. Do Not trench under TEP / UES underground equipment without the presence of an Access Crew. For conduit installation into existing underground equipment, contact Access at 918-8300 (761-7952 UES) to assist with the conduit placement.

TEP Tucson Electric Power / UniSourceEnergy SERVICES SANTA CRUZ COUNTY	INITIATED BY	SC	REVISION NO.	14	SR-215 Pg. 1 of 1
			ESR COMM.	1-17	
	ESR COMM.	6-78	EFFECTIVE DATE	1-17	

DUCT STUB DETAIL

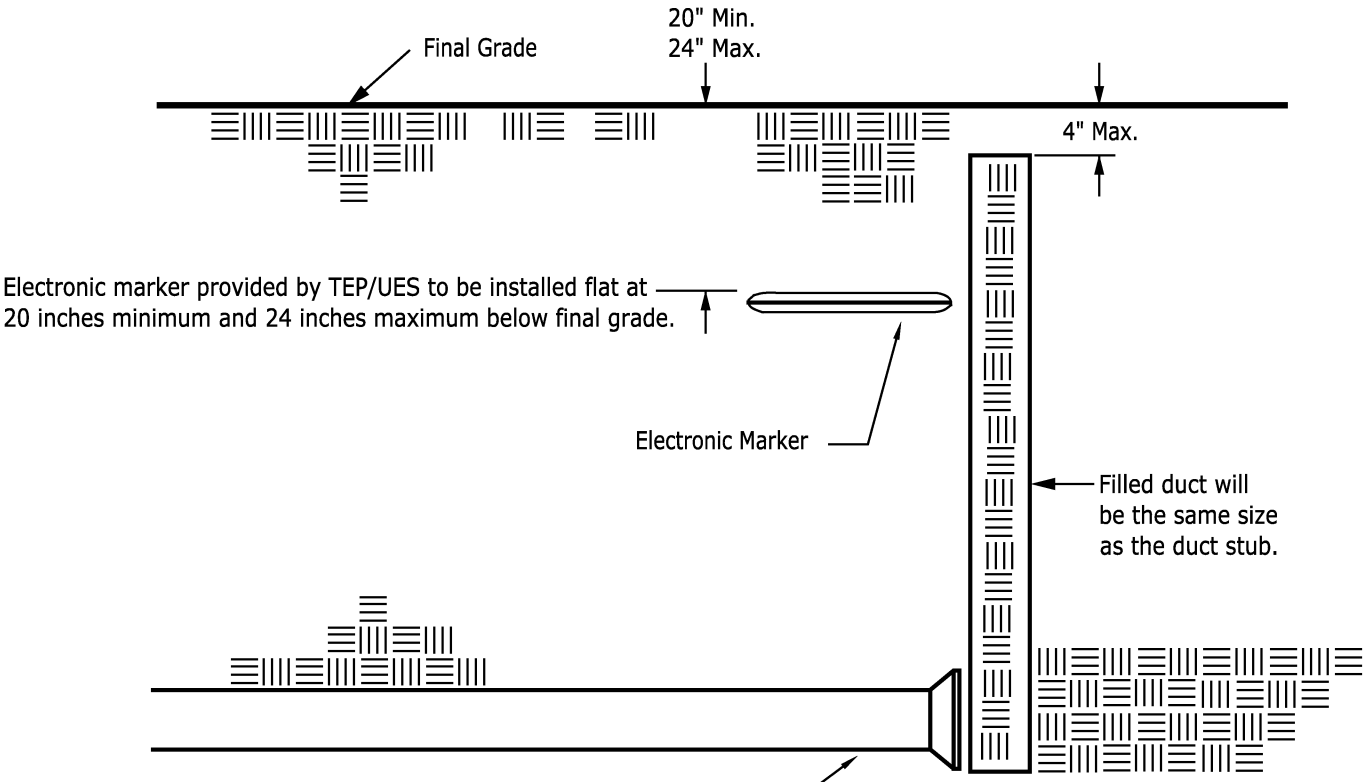

Size and number of ducts as indicated on TEP/UES drawing.
Plug open ends with duct plugs.

Inspection to be scheduled (TEP 918-8300 / UES 761-7951)
to verify the Electronic Marker and Filled Duct installation

TEP Tucson Electric Power / UniSourceEnergy SERVICES SANTA CRUZ COUNTY	INITIATED BY	SC	REVISION NO.	4	SR-218 Pg. 1 of 1
			ESR COMM.	1-17	
	ESR COMM.	10-91	EFFECTIVE DATE	1-17	

USE: Customer installed portion of riser on utility owned pole.

UNDERGROUND RISER CUSTOMER INSTALLED 2 1/2", 4" AND 6" CONDUIT

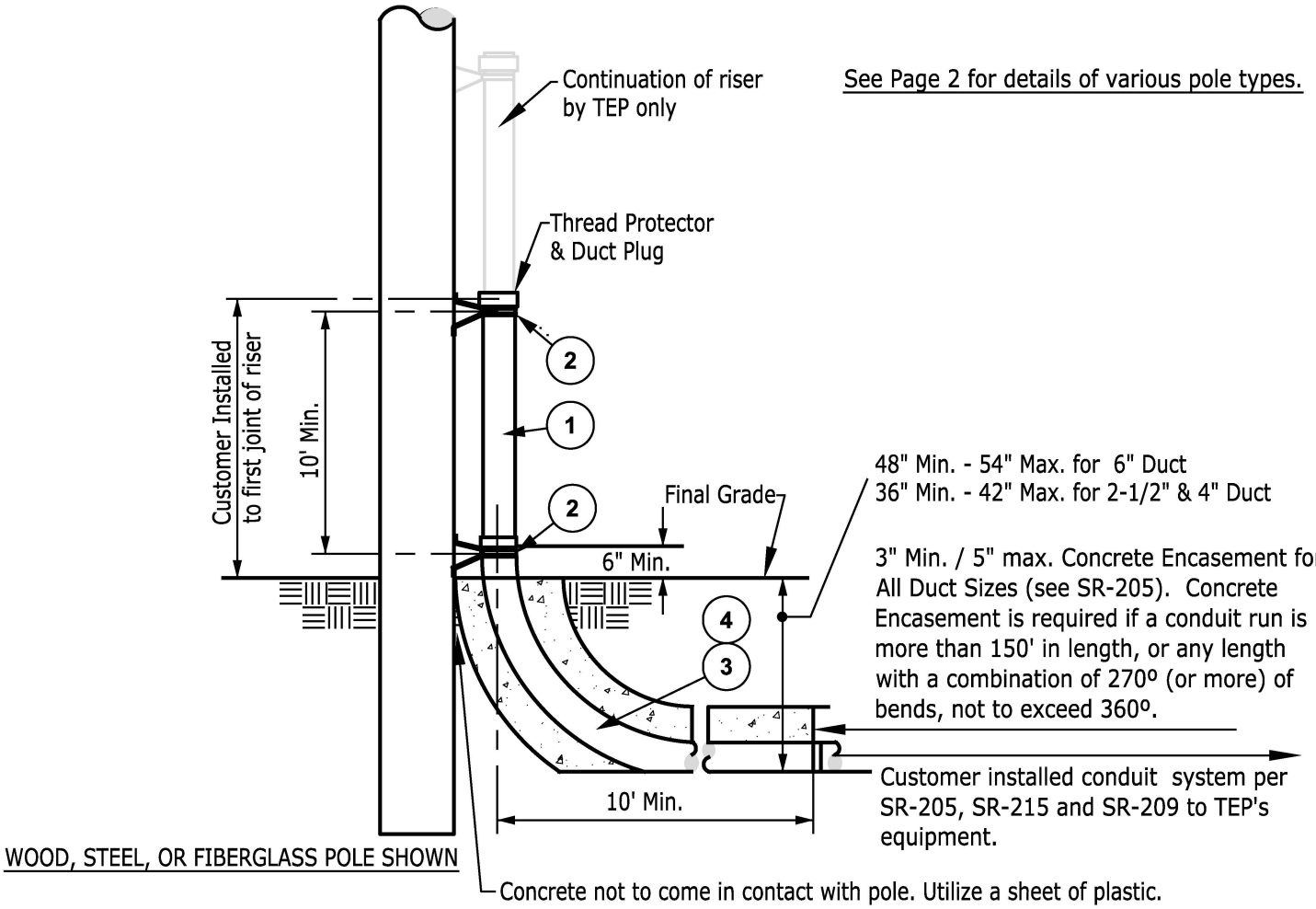

NOTES:

1. Use the approved stand-off brackets & fasteners for pole type. (wood, steel, concrete & fiberglass).
2. If an additional riser is to be placed on the pole, it will be next to the existing riser, including Telco & CATV. See SR-221.
3. Rigid Steel, IMC, and Rigid Aluminum conduit must have a protective tape applied. The tape is to be installed starting 6" above final grade down beyond the (HDPE or PVC) coupling joint. Use 10 mil. protection tape in a half lap installation.

Item No.	Description
1.	Conduit, 2 1/2", 4" & 6" install conduit riser in the quadrant as specified by TEP. Rigid or intermediate galvanized steel, or rigid. 6" Rigid aluminum for 46kv installation.
2.	Standoff Bracket to be used on 2 1/2", 4" and 6" risers. 3/8" x 3" Lag Screws to be used to secure mounting hardware for 2 1/2" risers, 1/2" X 4" to be used on 4" & 6" risers. Concrete poles, use Band-it strapping. Steel poles and fiberglass poles, use Riv-Nut Inserts.
3.	90° x 48" minimum radius, rigid or intermediate galvanized steel for 6" conduit. Rigid aluminum for 46kv installation.
4.	90° x 36" minimum radius, rigid or intermediate galvanized steel for 2-1/2" and 4" conduit.

USE: Customer installed portion of riser on utility owned pole.

UNDERGROUND RISER
CUSTOMER INSTALLED
2 1/2", 4" AND 6" CONDUIT

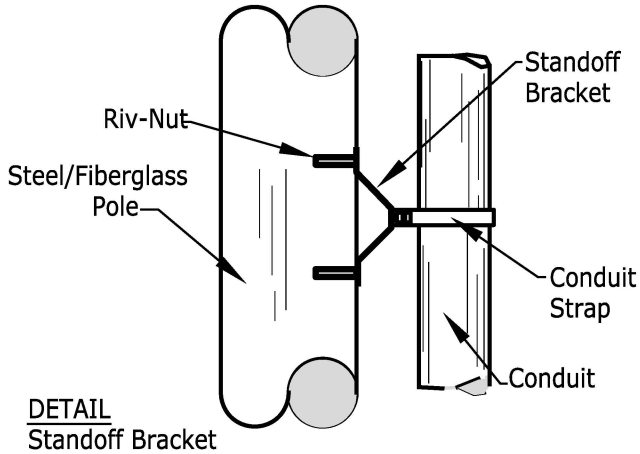

DETAIL
Standoff Bracket
(Steel/Fiberglass Pole)

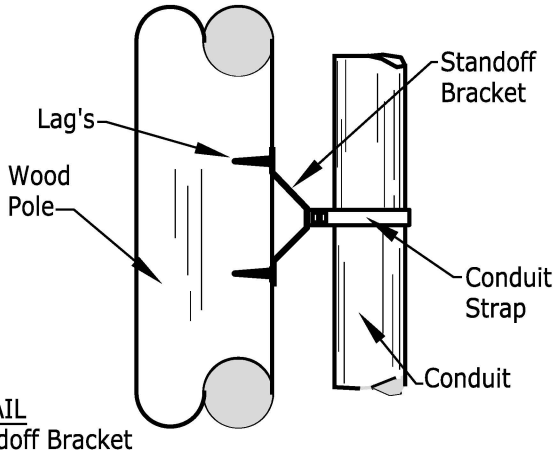

DETAIL
Standoff Bracket
(Wood Pole)

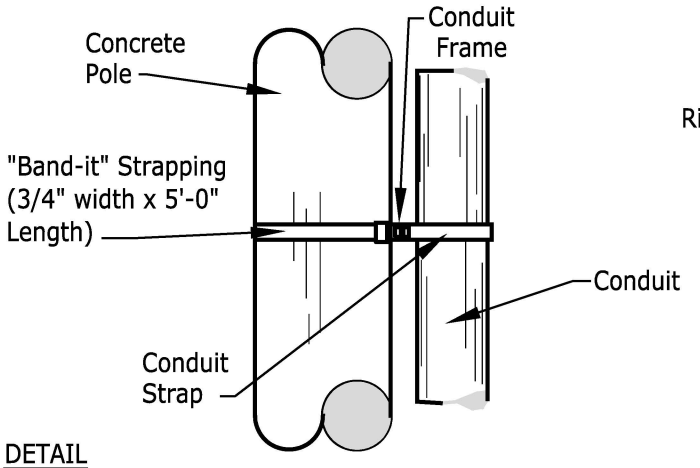

DETAIL
Conduit/pole Strap
(Concrete)

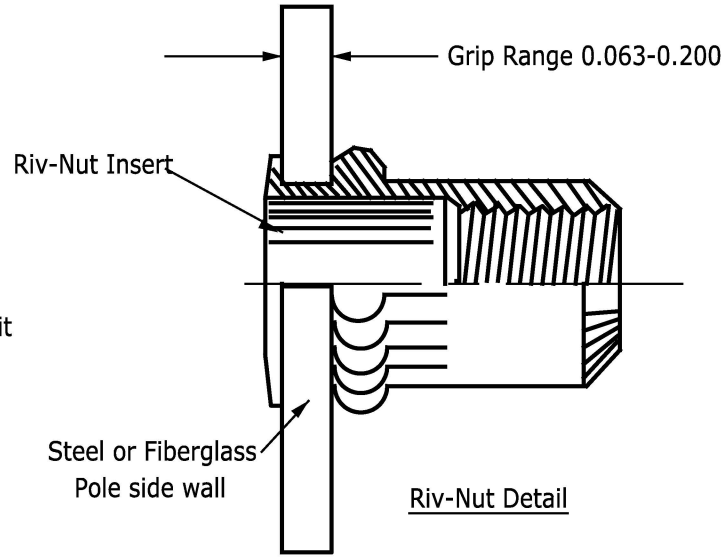

Riv-Nut Detail

Aluma-Form Cat. No.
4-CSO-7/STK-2.5T 2 1/2"
4-CSO-7/STK-4T 4" 6"
4-CSO-10/STK-6T

A.B. Chance (Hubbell) Cat. No.
C4-CSO-7/STK-2.5T 2 1/2" 4"
C4-CSO-7/STK-4T
C4-CSO-10/STK-6T 6"

Riv-Nut Tooling
Installing tool - L-722-5013
Riv-Nut - AB66900

"Band-it"/UIC strapping
3/4" Strap Cat. No. G46099
Buckles Cat. No. G44099

Banding Kit*
Cat. No. G46099/G44099
*available at BSE, kit includes (2) 5'-0" banding straps and (2) buckles

When mounting to concrete pole, use the conduit strap and the conduit frame with the strapping. The strapping bands must be installed with a Band-it tool, (Cat. No. G40269) This tool is available for rent and the strap is available from: Border States Electric - 294-1414

TEP Tucson Electric Power / UniSourceEnergy SERVICES SANTA CRUZ COUNTY	INITIATED BY	SC	REVISION NO.	17	SR-220 Pg. 2 of 2
			ESR COMM.	5-12	
	ESR COMM.	3-78	EFFECTIVE DATE	8-12	

PULL BOXES WITH MANHOLE

PULL BOX: A - 5'x10'x7'H
B - 6'x12'x7'H
C - 10'6"x16'x8'H
16 D - 10'1"x17'x8'H

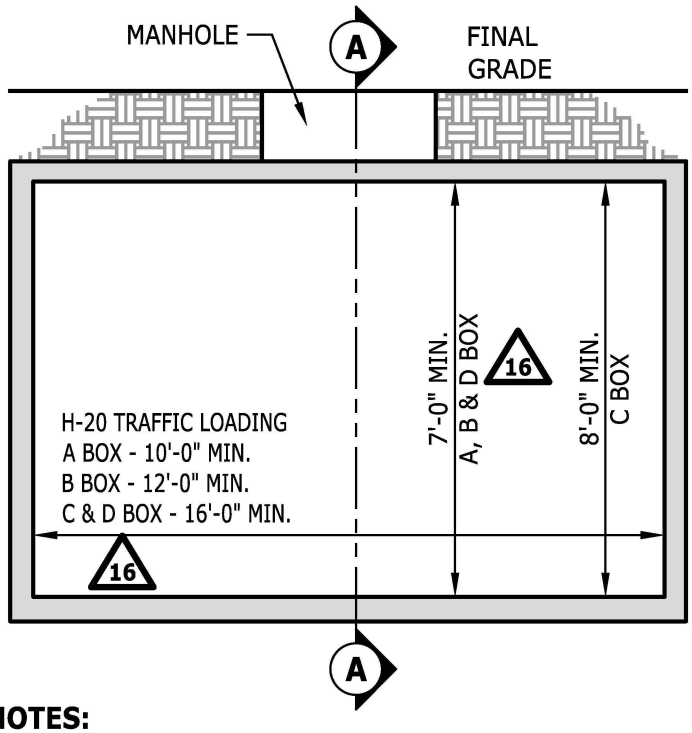

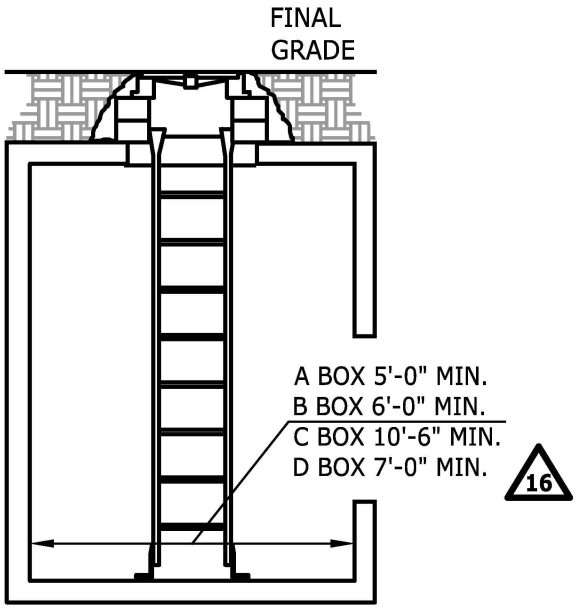

SECTION A-A

NOTES:

1. SEE SERVICE PROVIDER CONSTRUCTION DRAWINGS FOR DUCT ENTRANCE LOCATIONS.
2. SERVICE PROVIDER RESERVES THE RIGHT TO REQUEST SPECIAL ENDBELL PLACEMENT BY THE MEANS OF CORE DRILLING EXISTING OR NEW PULL BOXES.
3. AN ACCESS APPOINTMENT MAY BE REQUIRED, SEE THE CONSTRUCTION DRAWINGS FOR DUCT ENTRANCE LOCATIONS.
4. APPROVED SUPPLIERS ARE RESPONSIBLE FOR MEETING SERVICE PROVIDER PULL BOX SPECIFICATIONS.

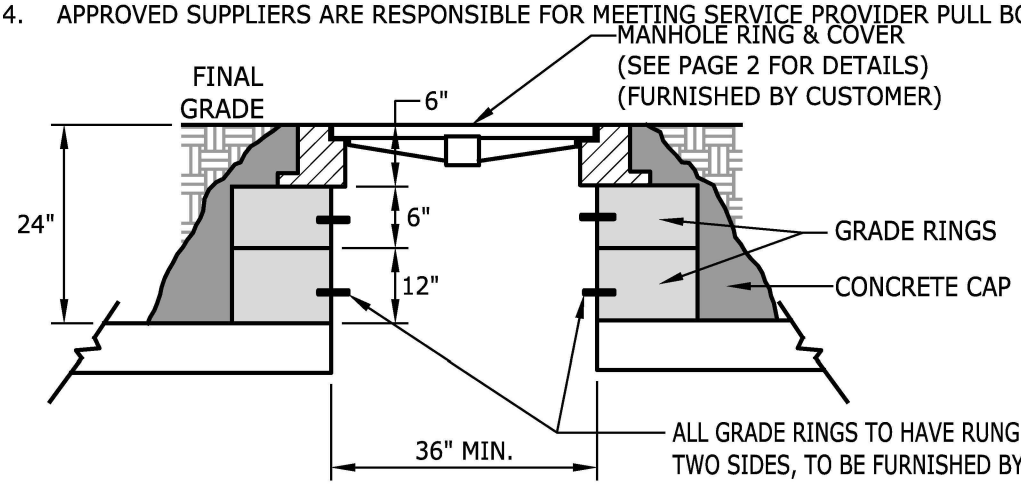

NOTE:
ALL GRADE RINGS TO BE 36 INCH MINIMUM DIAMETER, WITH LADDER RUNG IN EACH.

MANHOLE DETAILS

INFRA-RISER RUBBER COMPOSITE ADJUSTMENT RINGS ARE APPROVED FOR THE USE ON EXISTING INSTALLATIONS. THESE RINGS COME IN SIZES 1/2, 1, 2 & 3 INCH HEIGHTS FOR THE THREE SIZES OF COVERS LISTED IN EM-L59 PAGE 2 OF 2.

16 SUPPLIERS: BORDER STATES (LEAD TIME IS 2-6 WEEKS)
JENSEN PRECAST (IN STOCK)

PULL BOXES WITH MANHOLE - MANHOLE AND LADDER DETAILS

MANHOLE COVER:

FURNISHED BY THE CUSTOMER AND
INSTALLED IN THE UNLOCKED POSITION
FIBER REINFORCED POLYMER (60 LBS.)
WITH CAST STAINLESS STEEL HARDWARE
MANUFACTURER: McGARD FS00001743.524
H-20 TRAFFIC RATED
IDENTIFIED WITH "ELECTRIC"

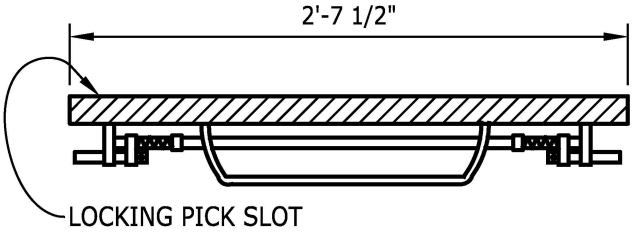

MANHOLE RING:

FURNISHED BY THE CUSTOMER.
CAST IRON; H-20 TRAFFIC
LOADING. RING TO CONTAIN
LIFTING EYES. RING SEAT MUST
MEASURE EITHER 0.5" OR 1.125" IN
HEIGHT.

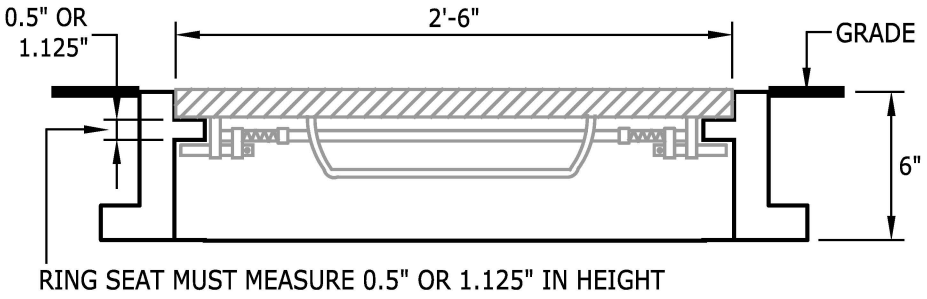

NOTES:

1. CUSTOMER TO FURNISH LADDERS IN PULL BOXES;
   A PULL BOX-(1) LADDER
   B, C & D PULL BOX-(2) LADDERS
   15
2. LADDERS CONSTRUCTED AND INSTALLED PER ANSI A14.3 LATEST EDITION, FOR FIXED LADDER SAFETY REQUIREMENTS. 24 INCH MINIMUM CLEAR ACCESS WITH LADDER IN PLACE MUST BE MAINTAINED.
   15
3. FOR PULL BOX B, C & D LADDER(S) SHALL BE HUNG FROM THE FIRST GRADE RING ABOVE THE PULL BOX FACING THE PORTS OF THE INTERIOR WALLS, THEN SECURELY FASTENED TO CONCRETE INSERTS CAST INTO THE FLOOR.
   FOR PULL BOX A LADDER(S) SHALL BE HUNG FROM THE FIRST GRADE RING ABOVE THE PULL BOX FACING TRAFFIC WHEN ENTERING/EXITING, THEN SECURELY FASTENED TO CONCRETE INSERTS CAST INTO THE FLOOR.
4. FINISH: GALVANIZED

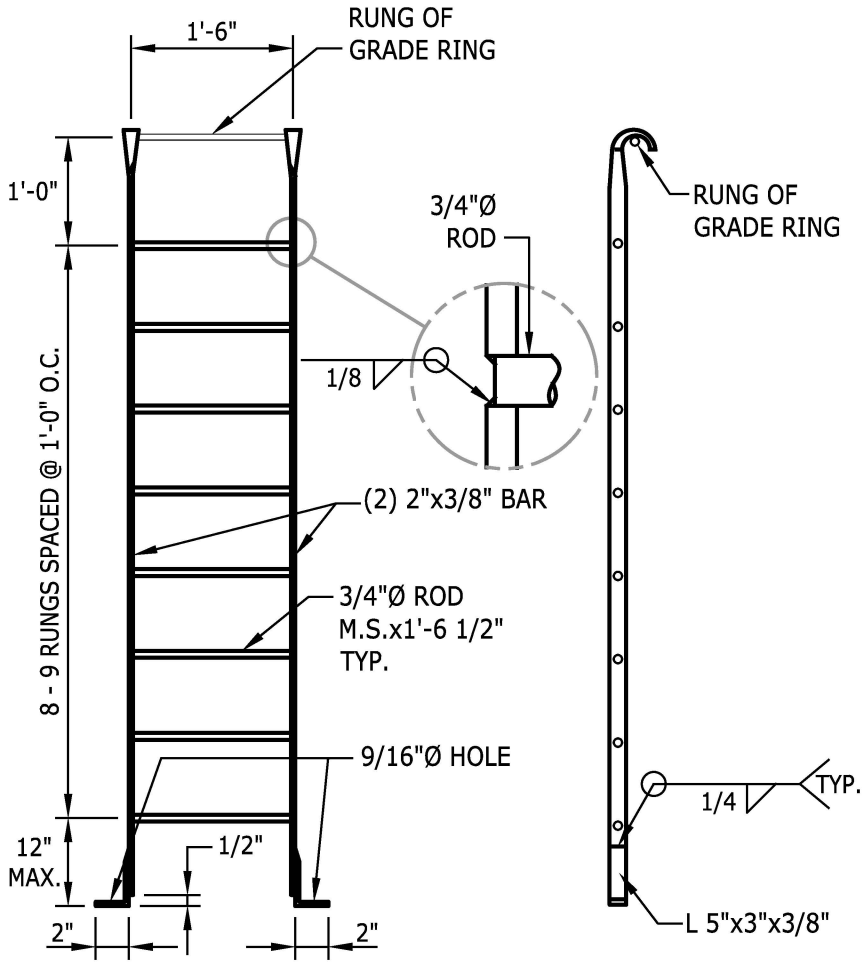

PULL BOX WITH MANHOLE
EXPANDED VIEW
PULL BOX A
(5' x 10' x 7')

NO LONGER APPROVED FOR MAINTENANCE ONLY

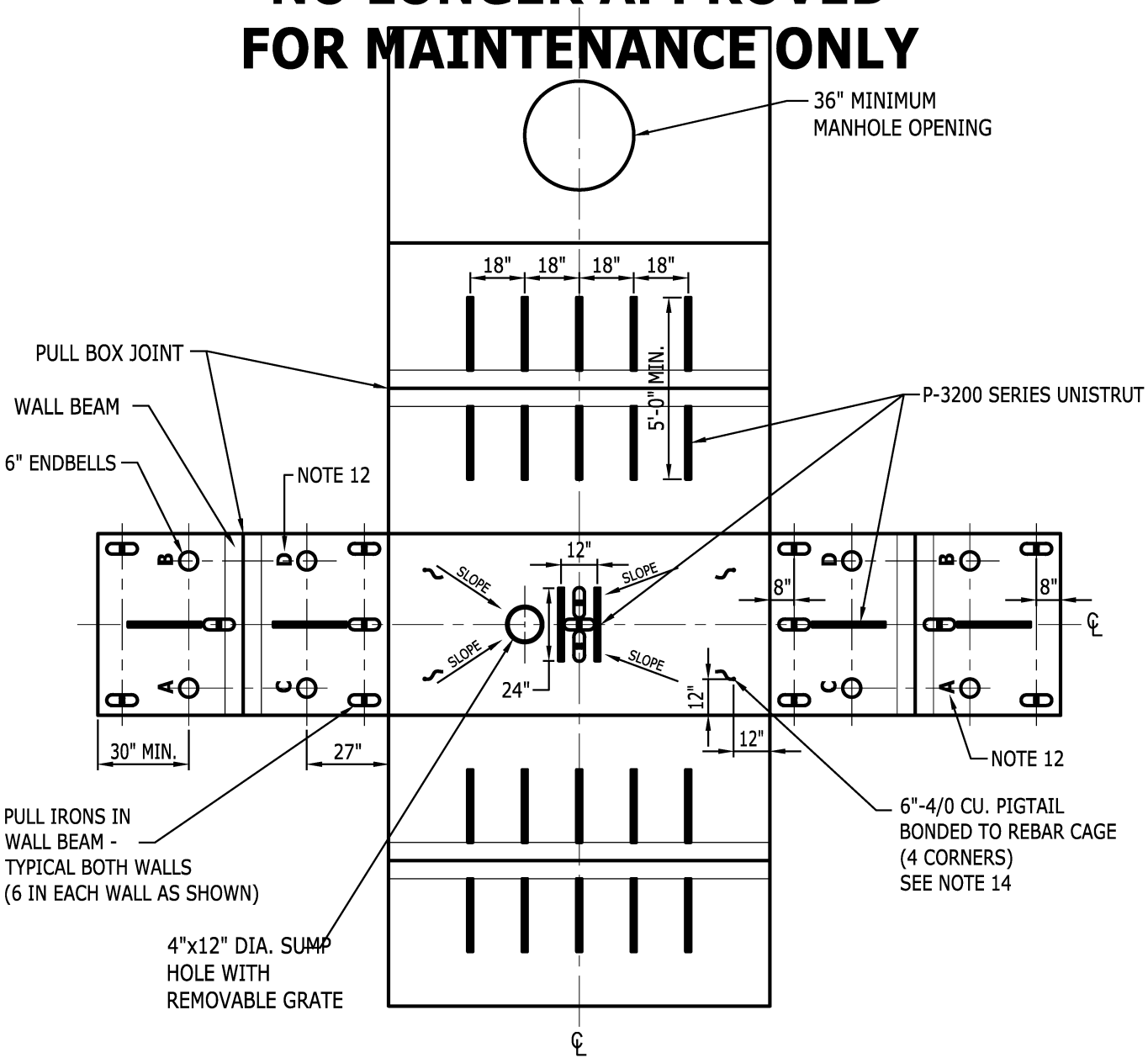

NOTES:

1. SEE ADDITIONAL REQUIREMENTS ON PAGE 6.
2. SEE TEP CONSTRUCTION DRAWINGS FOR DUCT ENTRANCE LOCATIONS.
3. APPROVED SUPPLIERS:
   - UTILITY VAULT CO.
   - HAYDEN CONCRETE
   - PRECAST MFG.
   - JENSEN PRECAST

PULL BOX WITH (2) MANHOLES
EXPANDED VIEW
PULL BOX B
(6' x 12' x 7')

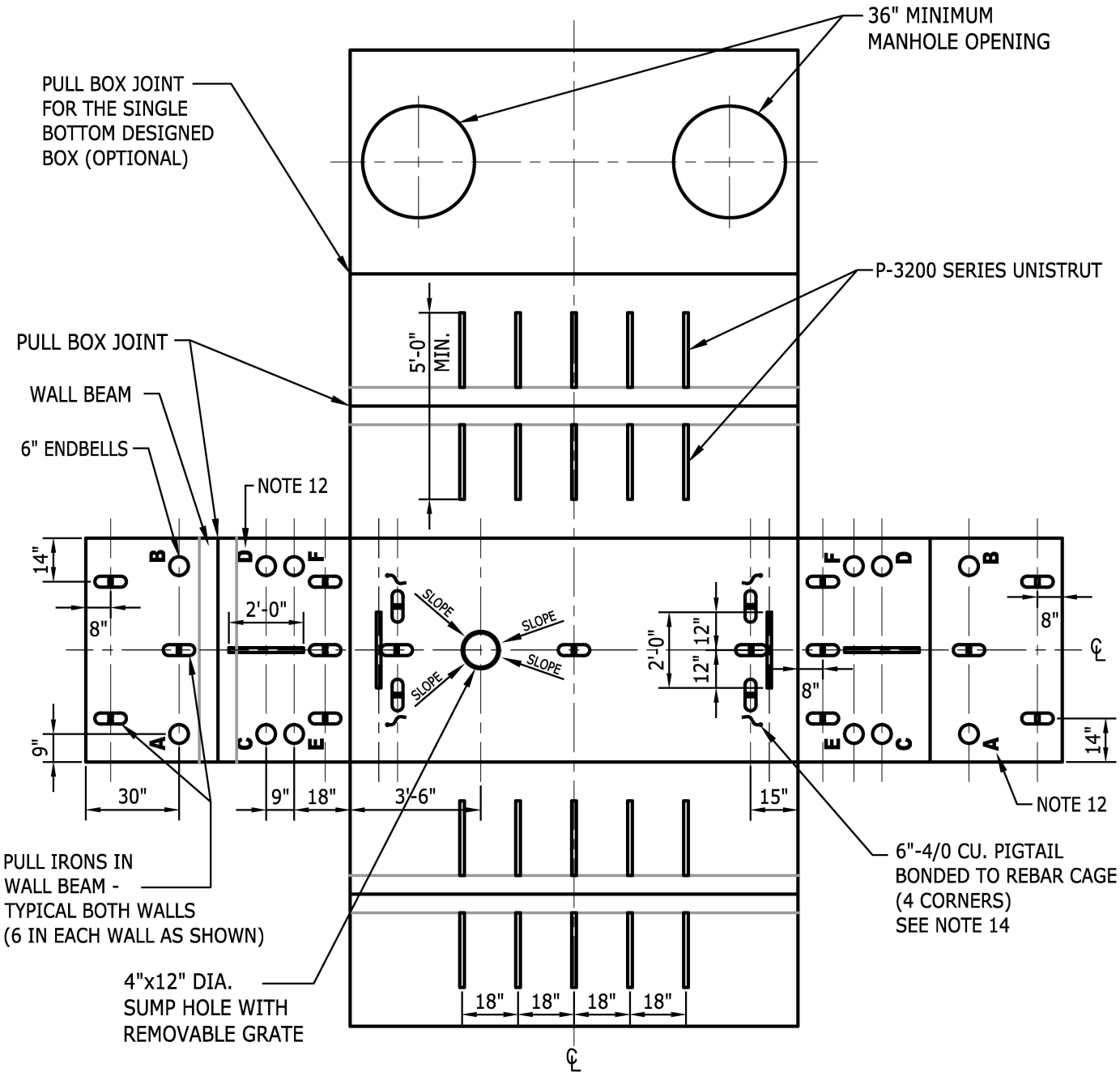

NOTES:

1. SEE ADDITIONAL REQUIREMENTS ON PAGE 6.
2. SEE TEP CONSTRUCTION DRAWINGS FOR DUCT ENTRANCE LOCATIONS.
3. APPROVED SUPPLIERS:
   - OLDCASTLE PRECAST
   - PRECAST VAULT CO.
   - HAYDEN CONCRETE
   - JENSEN PRECAST

PULL BOX WITH (2) MANHOLES
EXPANDED VIEW
PULL BOX C
(10'-6" x 16' x 8')

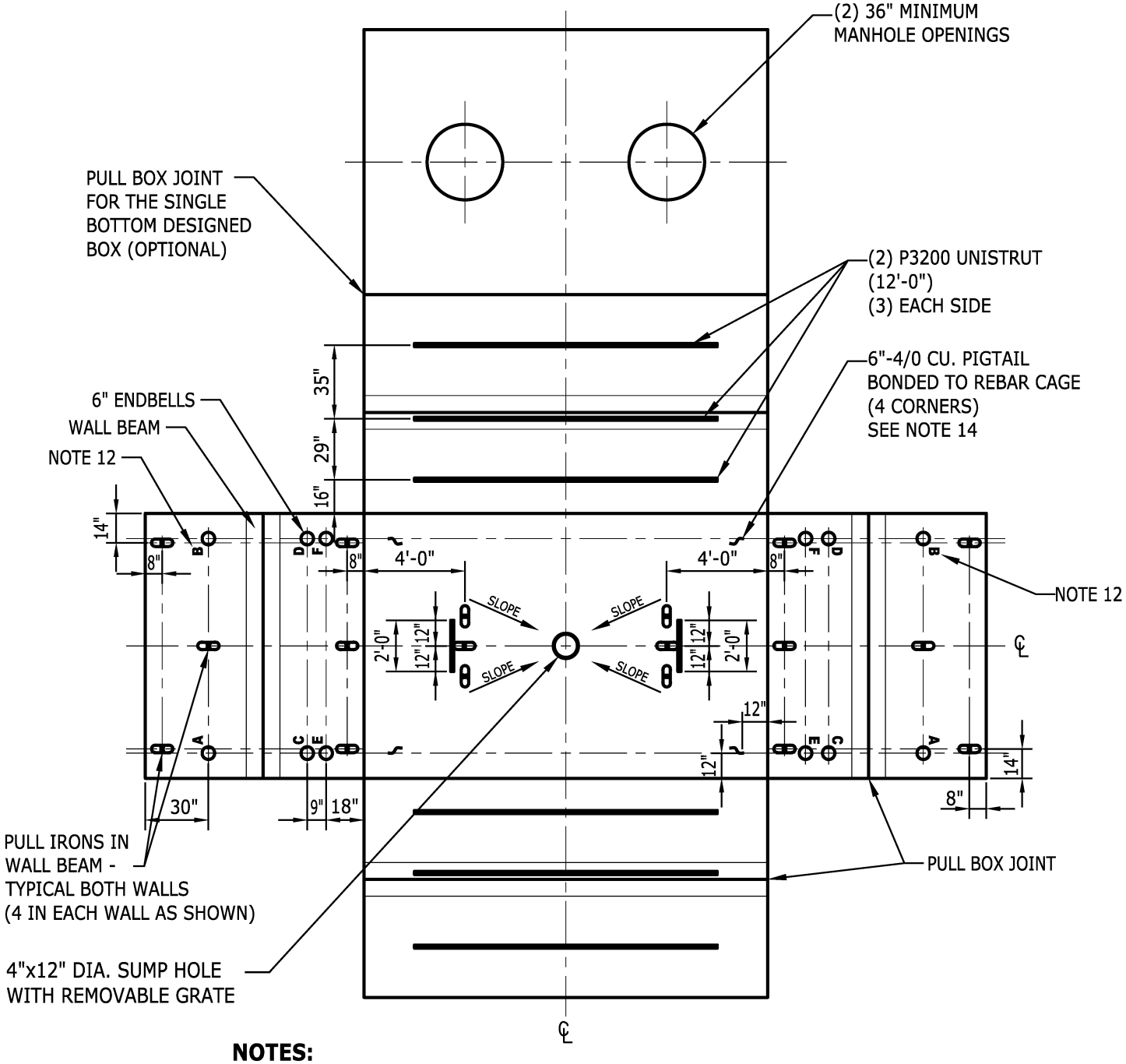

NOTES:

1. SEE ADDITIONAL REQUIREMENTS ON PAGE 6.
2. SEE TEP CONSTRUCTION DRAWINGS FOR DUCT ENTRANCE LOCATIONS.
3. APPROVED SUPPLIERS:
   OLDCASTLE PRECAST
   JENSEN PRECAST

PULL BOX

DUCT AND TRENCHING NOTES

1. Duct size to be 4" or 6" as specified. See SR-215 for trenching and duct installation.
2. Duct shall be of a type specified by the TEP Standard SR-205.
3. Bedding and backfill shall comply with the TEP Standard SR-207.

CUSTOMER REQUIREMENTS FOR PULL BOX INSTALLATION

1. Excavation for the pull box shall be such that the top of the manhole will be at final grade ± 1/4".
2. Pull box shall be located so that the duct will enter the pull box without any deflections.
3. Duct endbells are to be cast in place, flush with interior wall of pull box. All endbells are to be a standard 6" size and are to be placed as depicted for pull box A, B, C and D. See Construction Drawing for duct size and duct placement. Where duct size is other than 6", endbell adapters will be provided by the pull box manufacturer to accommodate the duct size being installed.
4. Prior to setting, the customer shall provide a minimum of 3 inches of bedding material as specified in SR-207 as a base for the pull box. This bedding material should be compacted and graded level at the proper elevation. All backfill shall be placed progressively in 6 inch lifts and compacted to a minimum of 95 percent of Standard Proctor Density (ASTM D698).
5. All reinforcement steel shall be deformed billet steel conforming to ASTM A615, Grade 60.
6. Manhole lid and ring to be furnished and installed by the customer.
7. Manhole is to be concreted to neck of pull box.
8. Manhole lid standard marking to be "Electric".
9. Precast manhole grade rings require a sealer to be placed at each interface.
10. Ladder to be provided by the pull box manufacturer and installed by the contractor.
11. The pull box manufacturer's name is to be embossed onto the inside top of the pull box.
12. Duct identification letters to be embossed in concrete above each endbell on inside and outside walls of pull box A, B, C and D boxes (see expanded views).
13. Outside duct plugs to be provided in each endbell entrance into pull box.
14. Ground wire to be attached to rebar cage by thermal weld or by a bronze bolted parallel connector designed for bonding use. Example: Burndy Connector Cat. No. KVSU28.
15. (14) Service Provider reserves the right to require density (compaction) testing to verify conformance to the standard referenced in item 4 above. If required, density (compaction) testing shall consist of one test at every two feet of vertical height of pull box backfill, alternating sides with successive two foot increments.
16. Manhole cover is to be installed in the unlocked position. The TEP inspector will lock the cover after all inspections are complete.

USE: PULL BOX DETAIL TYPE B & C

PULL BOXES WITH 2 MANHOLES

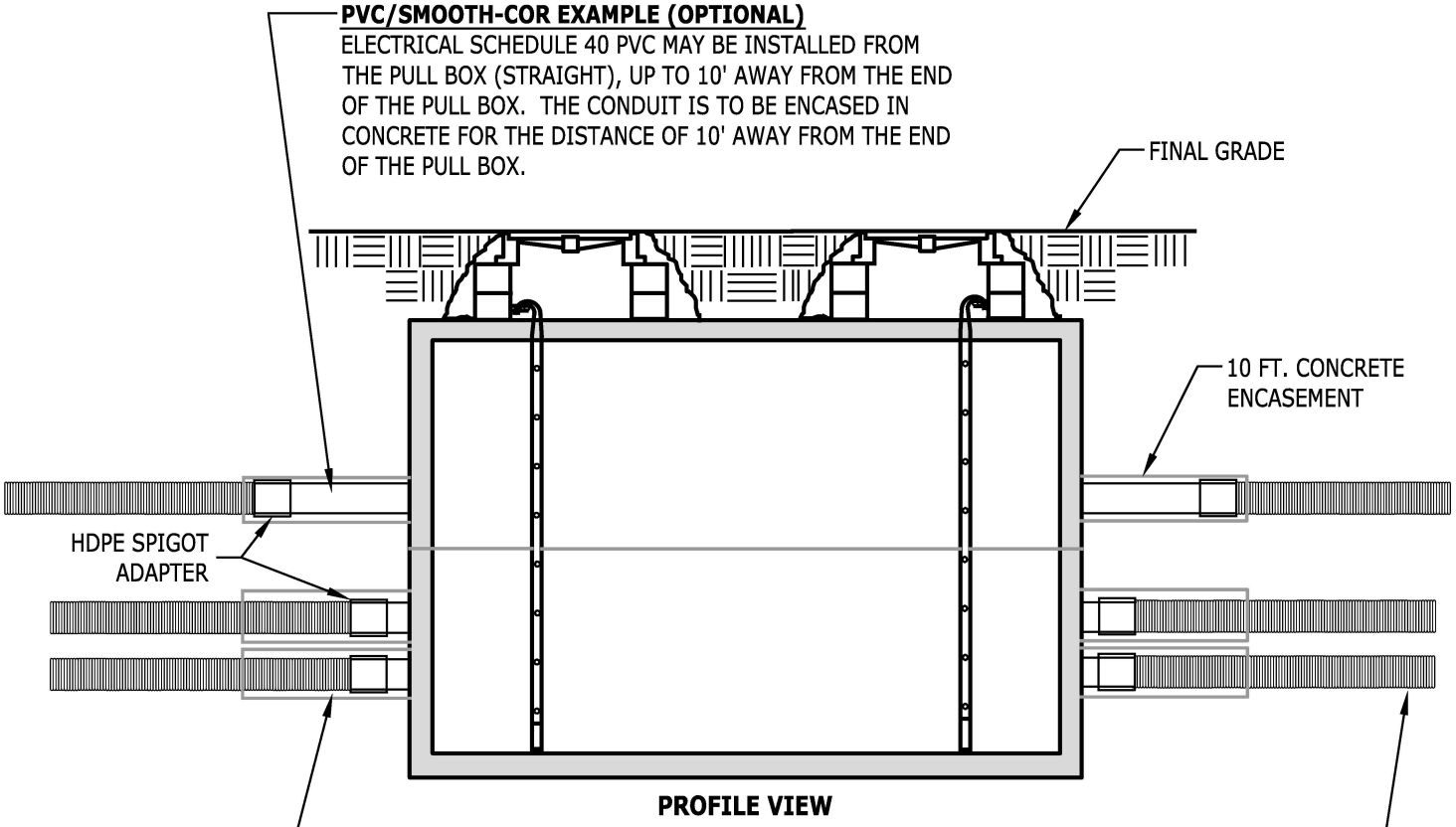

NOTE:

SEE TEP CONSTRUCTION DRAWINGS FOR DUCT ENTRANCE LOCATIONS. TEP RESERVES THE RIGHT TO REQUEST SPECIAL ENDBELL PLACEMENT BY THE MEANS OF CORE DRILLING EXISTING OR NEW PULL BOXES. AN ACCESS APPOINTMENT MAY BE REQUIRED, SEE THE CONSTRUCTION DRAWINGS FOR DUCT ENTRANCE LOCATIONS.

PULL BOX WITH (2) MANHOLES
EXPANDED VIEW
PULL BOX D
(10'-1" x 16' x 7')

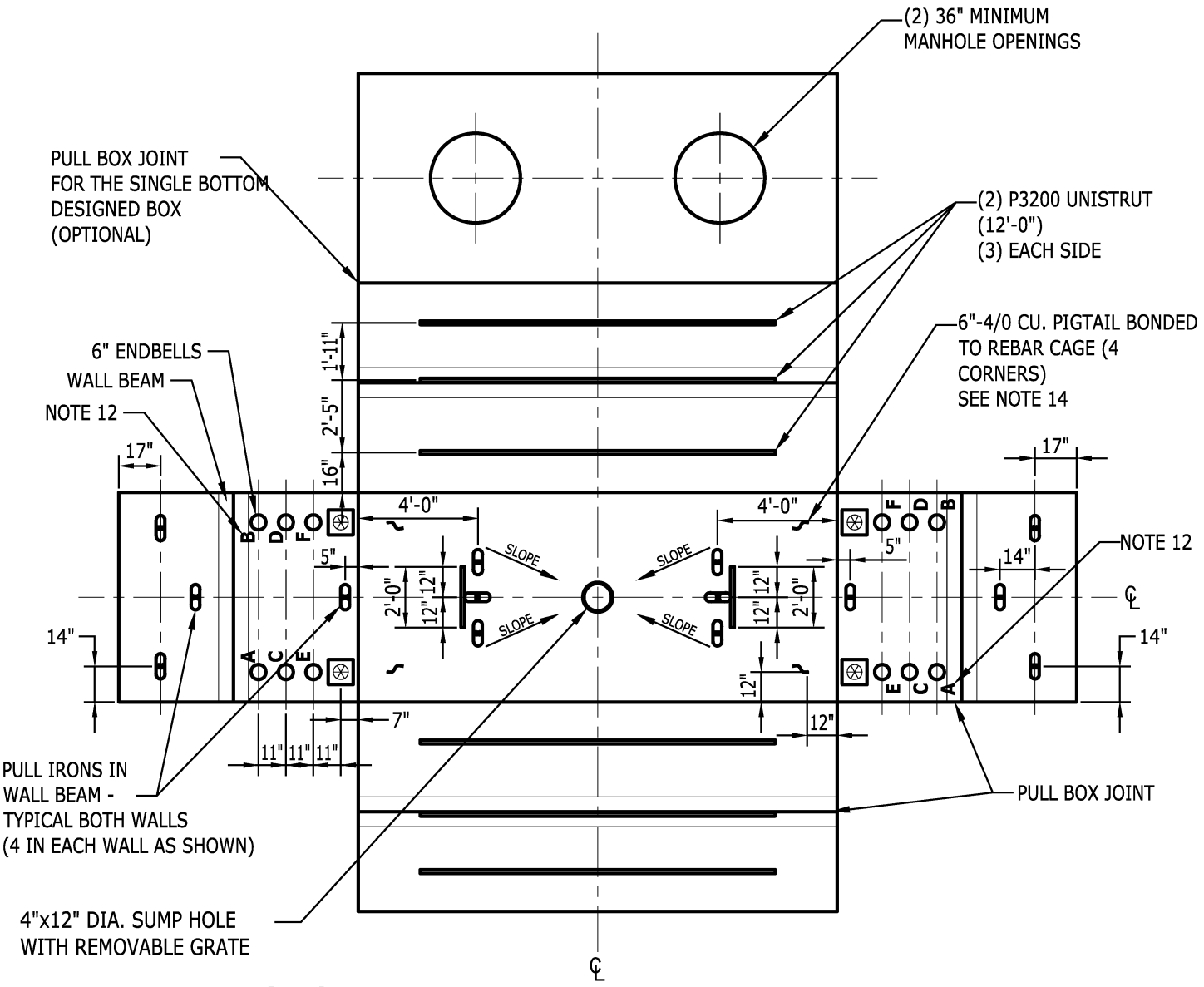

NOTES:

1. SEE ADDITIONAL REQUIREMENTS ON PAGE 6.
2. SEE TEP CONSTRUCTION DRAWINGS FOR DUCT ENTRANCE LOCATIONS.
3. APPROVED SUPPLIERS:
   OLDCASTLE PRECAST
   JENSEN PRECAST

PULL BOX WITH (2) MANHOLES
PLAN, SIDE & END VIEW
PULL BOX D
(10'-1" x 16' x 7')

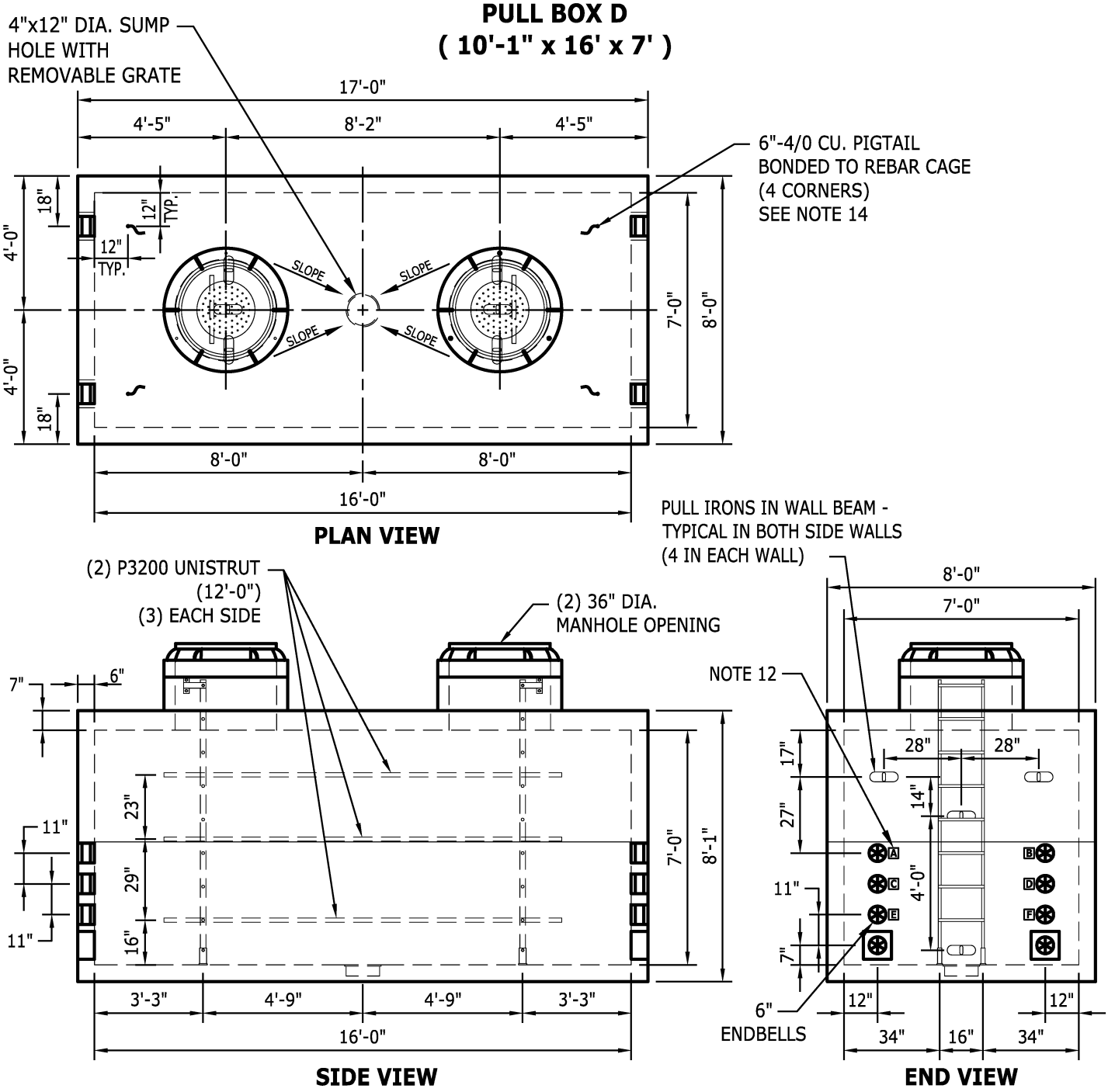

NOTES:

1. SEE ADDITIONAL REQUIREMENTS ON PAGE 6.
2. SEE TEP CONSTRUCTION DRAWINGS FOR DUCT ENTRANCE LOCATIONS.
3. APPROVED SUPPLIERS:
   OLDCASTLE PRECAST
   JENSEN PRECAST

PULLBOX 15kV
WITH LID

NO LONGER APPROVED
FOR MAINTENANCE ONLY

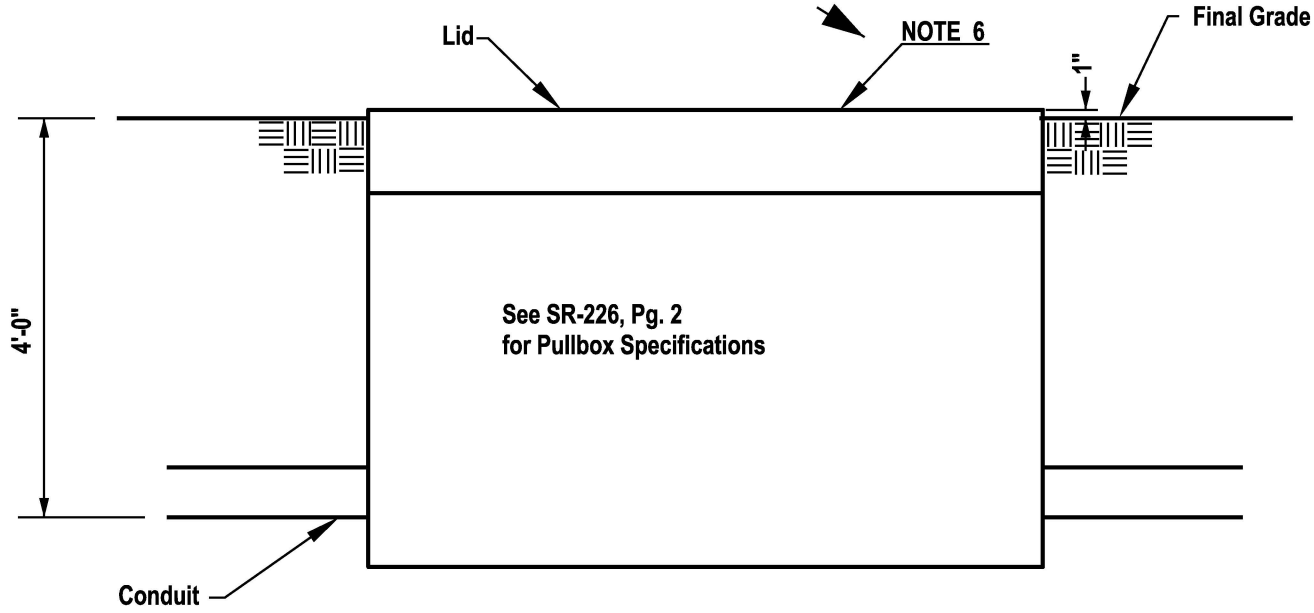

NOTES:

1. Excavation for pull box with lid shall be such that the top of the lid will be within 1" above final grade. Prior to setting the pull box, the bottom of the excavation shall consist of a minimum of 3-inches of suitable material graded level and compacted to a minimum relative density of 95 % of maximum at optimum moisture content. Suitable backfill shall be placed in 6-inch lifts to grade. Each lift shall be compacted to a minimum relative density of 95 % of maximum at optimum moisture content.
2. The pull box with lid shall not be installed in an area to be paved, nor shall it be landscaped over.
3. Ducts entering the pull box are to be installed without any deflections

U.G. PRECAST PULLBOX

Use: Primary pullbox
for single and three-phase
distribution.

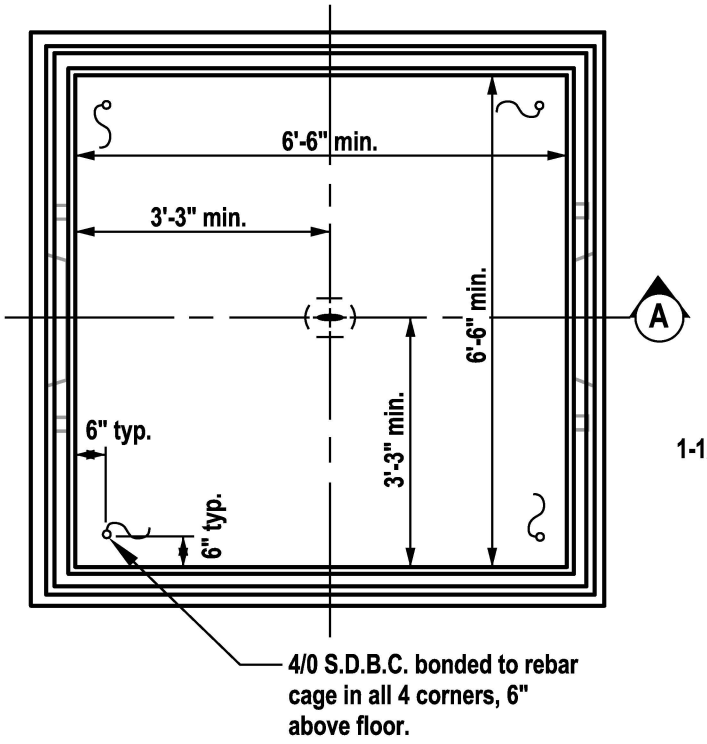

PLAN VIEW

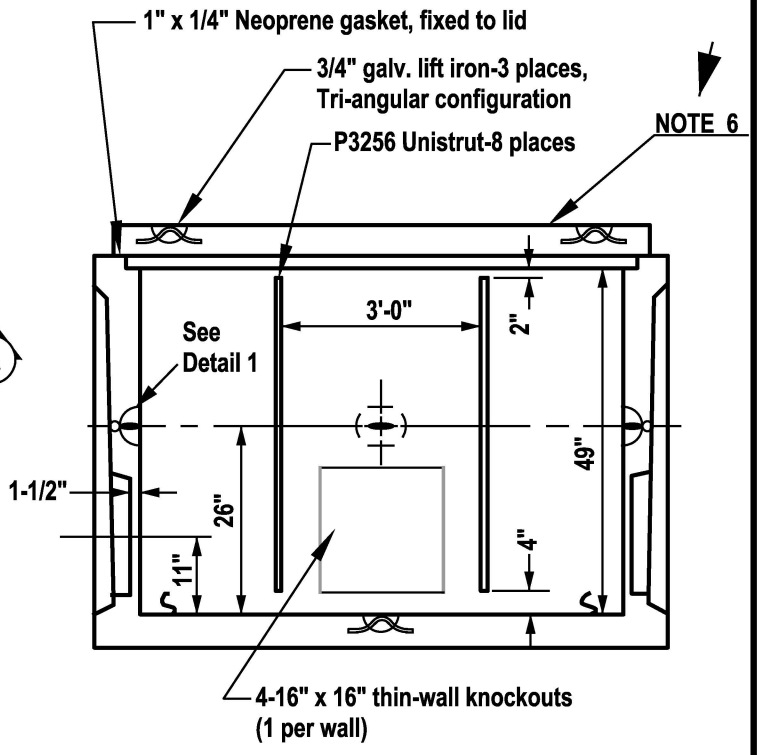

SECTION A

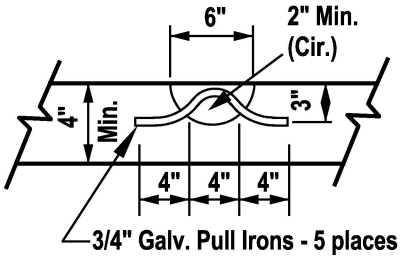

DETAIL 1

NOTES:

1. Materials:
   A. Reinforcing Bar - Shall conform to AC1-315 (latest revision)
   B. Concrete-Minimum strength, 4000 PSI and shall conform to AC1-318 (latest revision) with a minimum slump of 4".
   C. Pulling irons - 3/4"Ø M.S., Hot Dip Galvanized.
2. All bars to be cut to clear opening with 1-1/2" cover and/or knockouts with 1-1/2" cover. Endbells must be installed flush with interior wall of pullbox at the time of duct placement.
3. Loading - H - 20 traffic. No soil cover over top of box. Cover stamped " H - 20 ".
4. Approved suppliers - Hayden Concrete - Cat. No. SR-226.
   Utility Vault - Cat. No. SR-226
5. Ground wire to be attached to rebar cage by thermal weld or by a bronze bolted parallel connector designed for bonding use. Example: Burndy Connector, Cat. No. KVSU28.

→ 6. Approximate weight of the concrete lid is 6,000 lbs.

Tucson Electric Power	INITIATED BY	SC	REVISION NO.	8	SR-226 Pg. 2 of 2
	STANDARDS COMM.	2-77	STANDARDS COMM.	10-05	
			EFFECTIVE DATE	10-05	

EQUIPMENT BARRIER

Use: Protect equip. from damage.

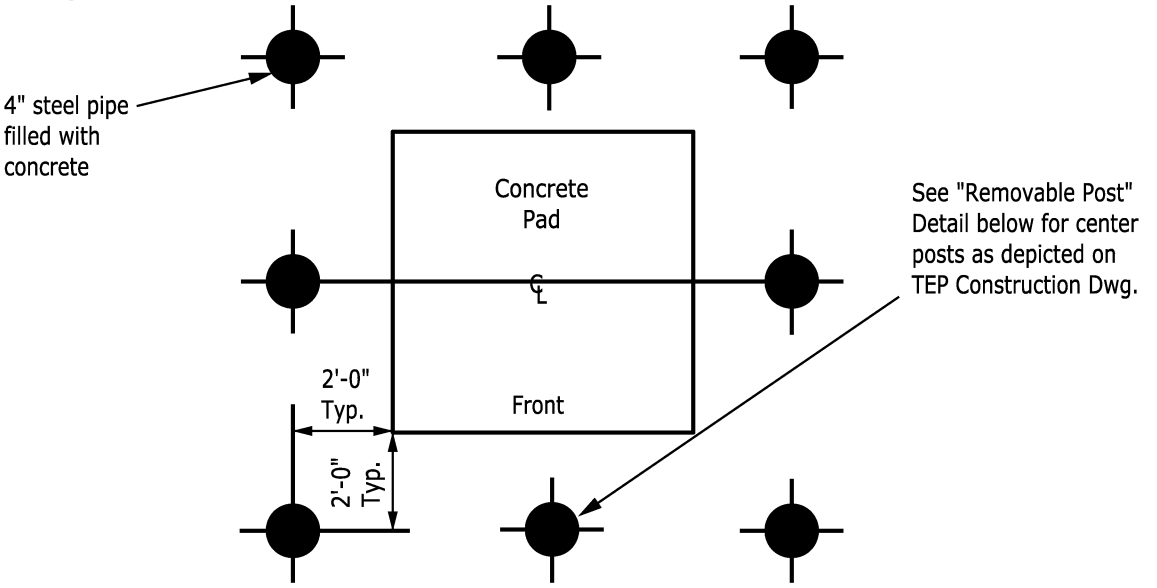

Top View

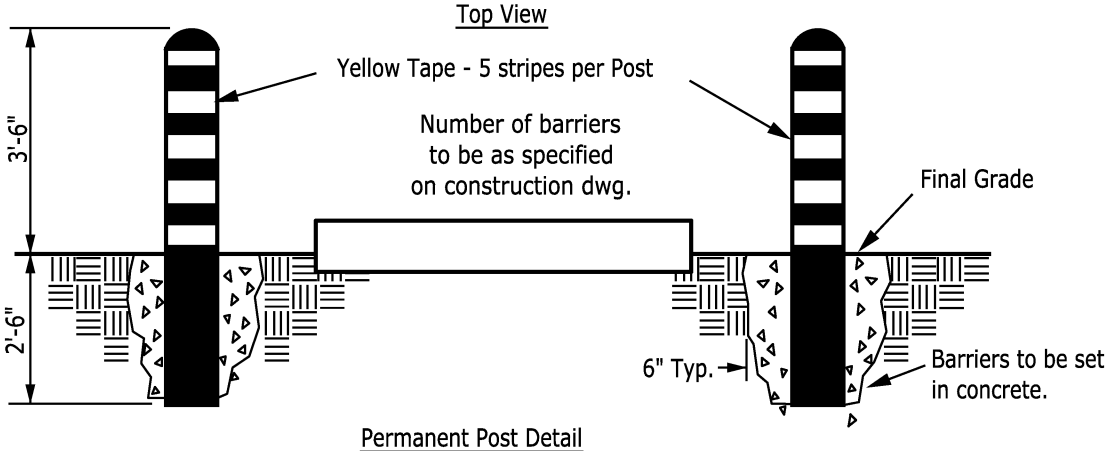

Permanent Post Detail

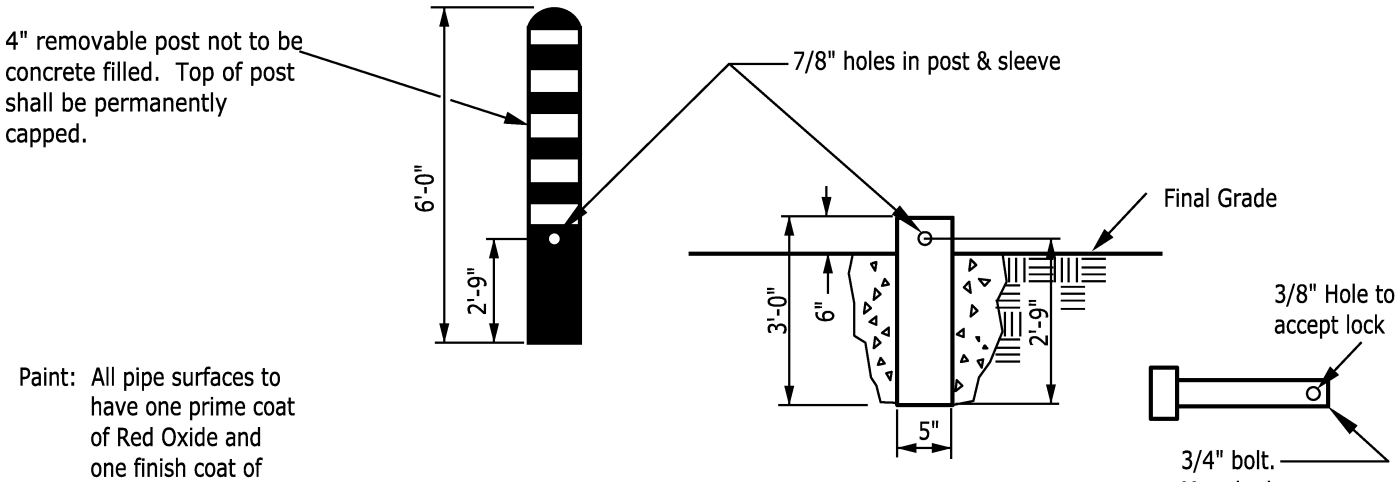

Removable Post Detail

Paint: All pipe surfaces to have one prime coat of Red Oxide and one finish coat of dull black enamel.

Tape: Yellow Reflective tape, 4" wide.

TEP Tucson Electric Power / UniSourceEnergy SERVICES SANTA CRUZ COUNTY	INITIATED BY	DC	REVISION NO.	13	SR-230 Pg. 1 of 1
			ESR COMM.	1-17	
	ESR COMM.	6-78	EFFECTIVE DATE	1-17	

3Ø FUSED JUNCTION CABINET (F2) PAD

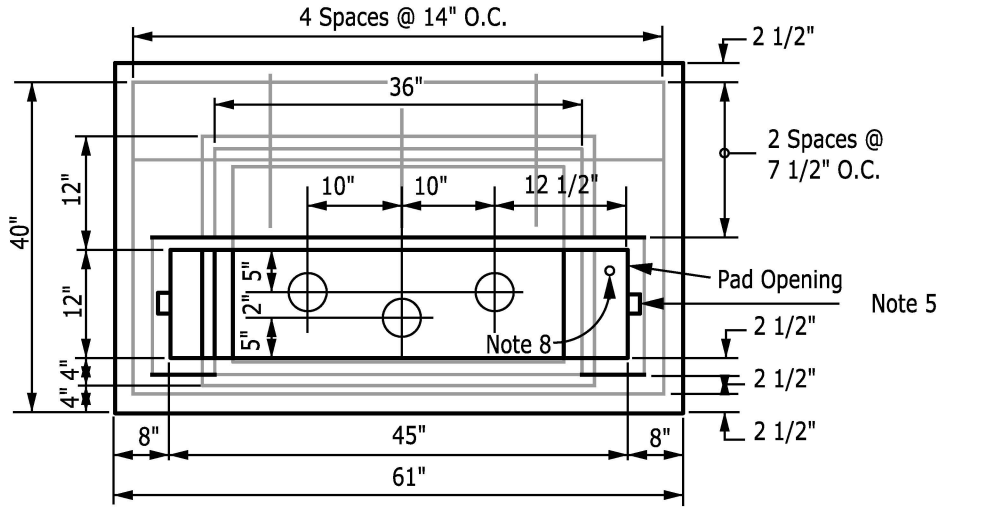

FRONT

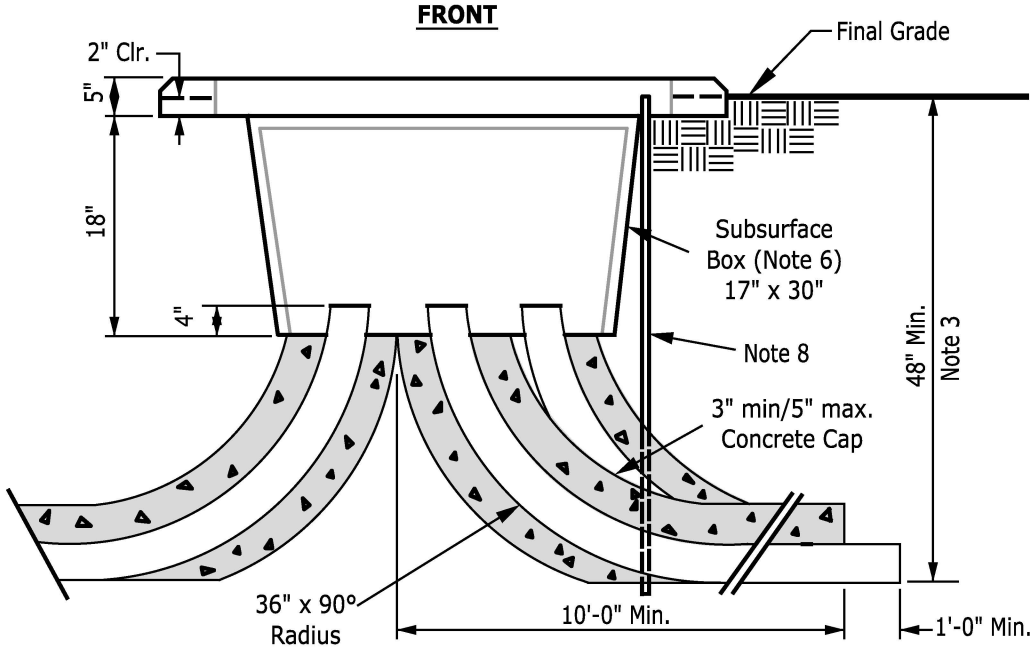

SECTION A-A

NOTES:

1. All rebar shall be No. 4 and shall be placed so that it does not extend into the pad opening. All concrete and reinforcement shall meet specifications contained in SR-205. The pad surface shall be level and troweled smooth.
2. Unless otherwise specified, all ducts are to be 4 inch and are to be placed according to the dimensions depicted in the above drawing. The duct runs shall be encased in a 3 inch minimum/ 5 inch maximum concrete cap for a minimum distance of 10 ft. measured horizontally from the top of the sweep.
3. Transition from 48 inch depth to 36 inch trench depth to be a gradual slope.
4. F-2 cabinets on pads exposed to vehicular traffic shall have protection installed in accordance with SR-230.
5. (2) 1 5/8" x 2" long concrete insert "Unistrut" tie downs.
6. The F-2 pad may be purchased as a precast concrete pad, if it meets the above specifications and has been approved by TEP. The subsurface box may be precast concrete or plastic.
7. Currently approved pad with subsurface box is: Hayden Conc. Cat. No. SR232.
8. Customer to provide and install a 5/8" x 8'-0" copper coated ground rod prior to concrete being poured. The top of the rod shall be 2 inches below the top of the pad.

USE:
Customer Provided and Installed Equipment Pad

TRANSFORMER/CAPACITOR PAD UNDERGROUND 3Ø

APPROVED PRECAST CONCRETE PAD IS PREFERRED

BLDG., FENCE OR WALL LINE

Transformer Installations
3Ø, 75KVA

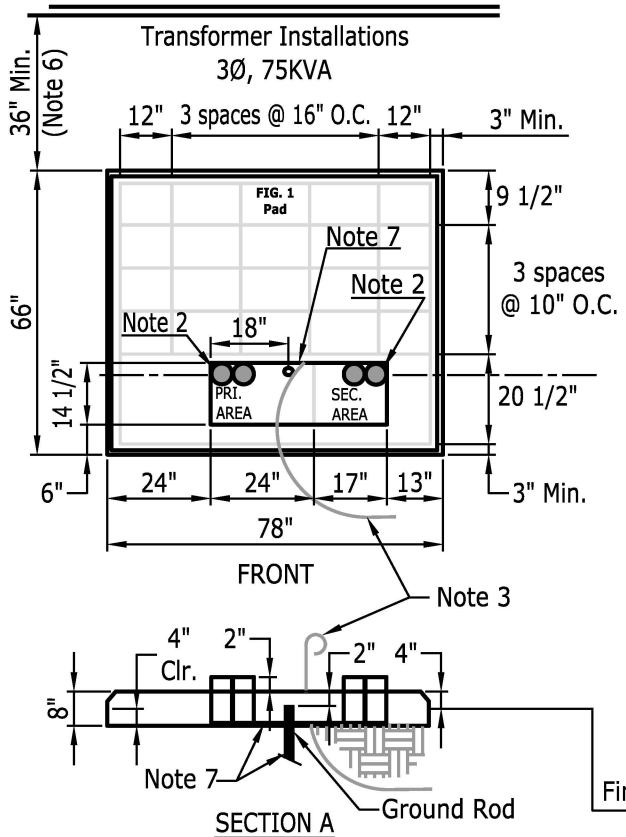

SECTION A

Use: 3Ø, 75 KVA Transformer or Capacitor

FIGURE 1

Approximate weight 3,200 lbs

BLDG., FENCE OR WALL LINE

Transformer Installations
3Ø, 150 KVA THRU 2500 KVA

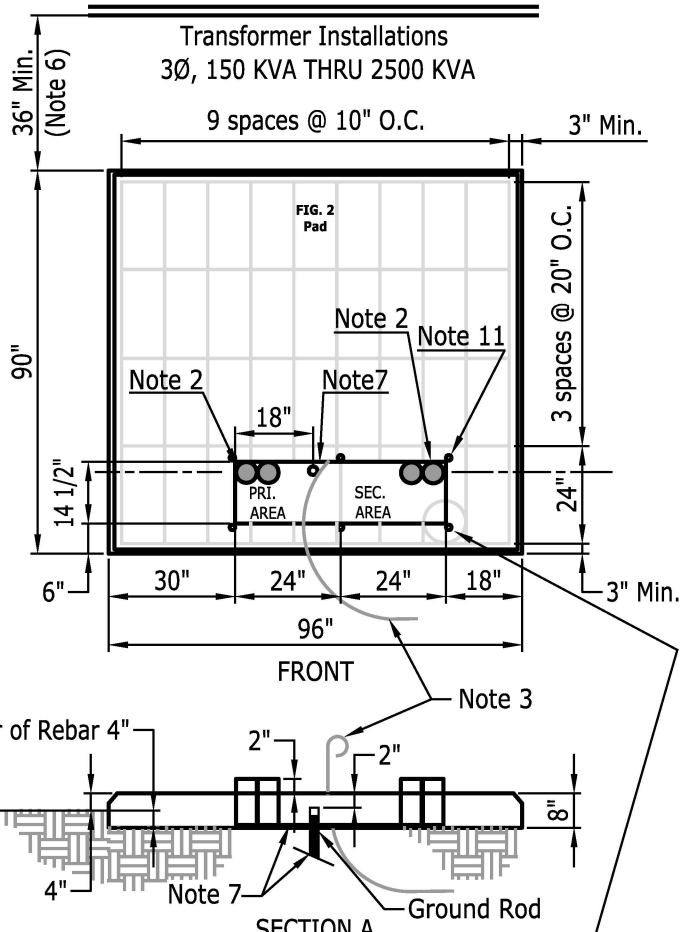

SECTION A

Use: 3Ø, 150 KVA THRU 2500 KVA Transformers

FIGURE 2

Approximate weight 5,600 lbs

BLDG., FENCE OR WALL LINE

Capacitor Installations

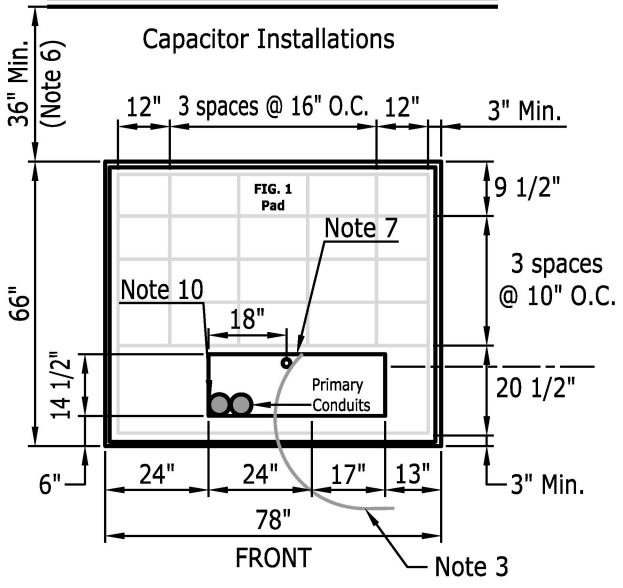

See SR-241 for the Capacitor Civil Installation Requirements

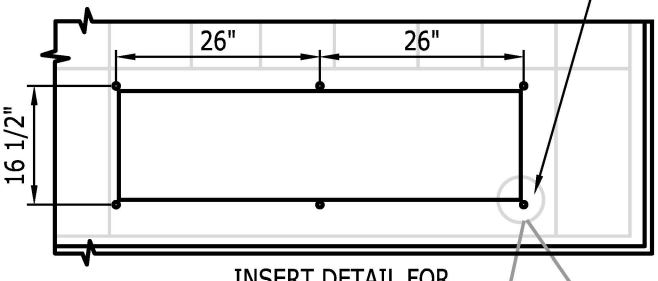

INSERT DETAIL FOR
THE FIGURE 2 PAD

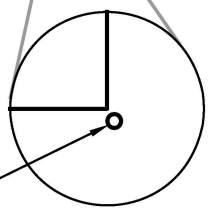

NOTE 11
Install (6) 3/8" x 1 - 1/4" in length zinc plated or equivalent steel inserts as detailed

TEP Tucson Electric Power / UniSourceEnergy SERVICES SANTA CRUZ COUNTY	INITIATED BY	SC	REVISION NO.	18	SR-233
			ESR COMM.	1-17	
	ESR COMM.	12-78	EFFECTIVE DATE	1-17	Pg. 1 of 2

TRANSFORMER/CAPACITOR PAD
UNDERGROUND 3Ø

NOTES:

1. All rebar shall be No. 4 and shall be placed so that it does not extend into the primary and secondary duct opening. All concrete and reinforcement shall meet specifications contained in SR-205. The pad surface shall be level and troweled smooth. All edges must be chamfered.

2. Place primary ducts as far to the left and to the rear of the primary area as possible and secondary duct(s) as far to the right and to the rear of the secondary area as possible (as viewed from the front of the pad). All ducts to be cut off 2 inches above the top of the pad. Unless otherwise specified, primary ducts shall be 4 inches and shall enter transformer pad with a 36" x 90° radius PVC sweep. This primary duct run shall be a minimum of 36 inches deep and shall be encased with a 3 inch minimum/5 inch maximum concrete cap for a minimum distance of 10 ft., measured horizontally from the top of the sweep. Concrete encasement required only on vertical sweeps if duct run is more than 150 feet in length or any length with a combination of 270º (or more) of bends, check with the Field Technician or the Area Designer. Secondary duct(s) shall be PVC no larger than 4 inches.

3. Install a #6 Cu. conductor for Telco bonding from the center front primary and secondary duct opening to a point 12 inches in front of pad and in line with right edge, 12 inches below final grade. Leave at least 2 ft. of #6 conductor above top of pad.

4. Leave at least 5 ft. of service cable extending above pad if the transformer is not in place. If the transformer is in place, leave a length of service cable which will extend to the top of the transformer. Each service (every neutral conductor) is to be identified with an address tag at the transformer location. Example, DYMO aluminum embossing strip or other approved method. Identify parallel conductors to assure proper connection, 1 ft. above top of pad. **Service conductors are to be no greater than 500 kcmil.**

5. Transformers on pads exposed to vehicular traffic shall have protective barrier installed in accordance with SR-230.

6. The rear edge and the sides of the transformer pad shall be no closer than 3 ft. to any building, wall, fence, or other above grade installation, and no structure of any kind shall overhang the pad and/or easement.

7. Customer/Contractor to provide and install a 5/8" x 8'-0" copper coated ground rod 2 inches below the top of the pad, and with 1/2 inch of mortar slurry mix in the pad opening. Driven ground rod to be within 6 inches of final grade (NESC 094B2). Note: Ground rods are Not Permitted to be cut under any circumstance. If soil conditions prohibit driving the ground rod per the SR, contact TEP's design department.

8. The transformer pad may be formed and poured in place (form and rebar inspection required) according to the above, or it may be purchased as a precast concrete pad (preferred) if it meets the above specifications and has been approved by the Company.

   Currently approved pads are:

   Hayden Cat. #P-6-56 (Figure 1); Hayden Cat. #P-8-758 (Figure 2)
   Precast Cat. #SR-233-1 (Figure 1); Precast Cat. #SR-233-2 (Figure 2)
   Oldcastle Precast Cat. #SR233-1 (Figure 1); Oldcastle Precast Cat #SR-233-2 (Figure 2)
   Inland Cat. #233-1 (Figure 1); Inland Cat. #233-2 (Figure 2)
   Jensen Cat. #233-A (Figure 1); Jensen Cat. # 233-B (Figure 2)

9. See SR-208 for site preparation for equipment pads on sloping grades and for screen wall enclosures.

10. Place primary ducts as far to the left and to the front of the primary area as possible (as viewed from the front of the pad). All ducts to be cut off 2 inches above the top of the pad. Unless otherwise specified, primary ducts shall be 4 inches and shall enter transformer pad with a 36" x 90° radius PVC sweep. See SR-241 for the Capacitor Civil Installation.

11. Figure 2 pads are to have (6) zinc plated or equivalent steel inserts that are 3/8" x 1 1/4" in length installed by the approved manufactures as detailed on page 1 .

EXCAVATION AND DUCT PLACEMENT FOR 3Ø JUNCTION CABINET (J2)

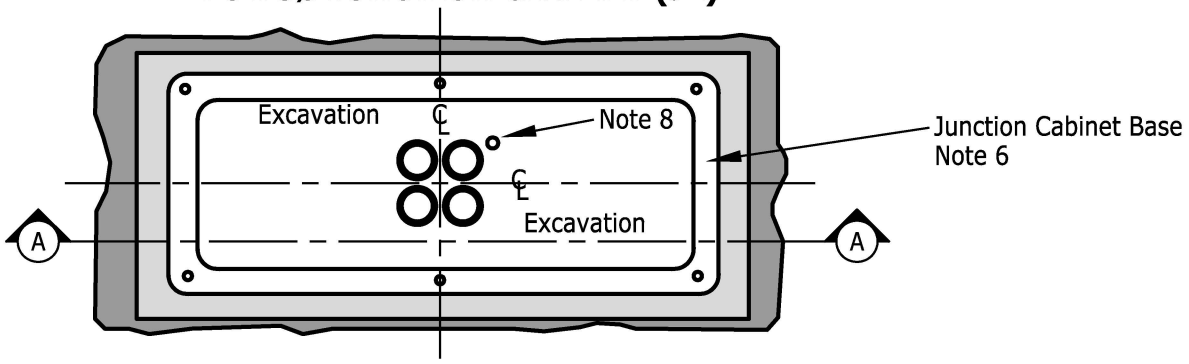

TOP VIEW - JUNCTION CABINET SITE

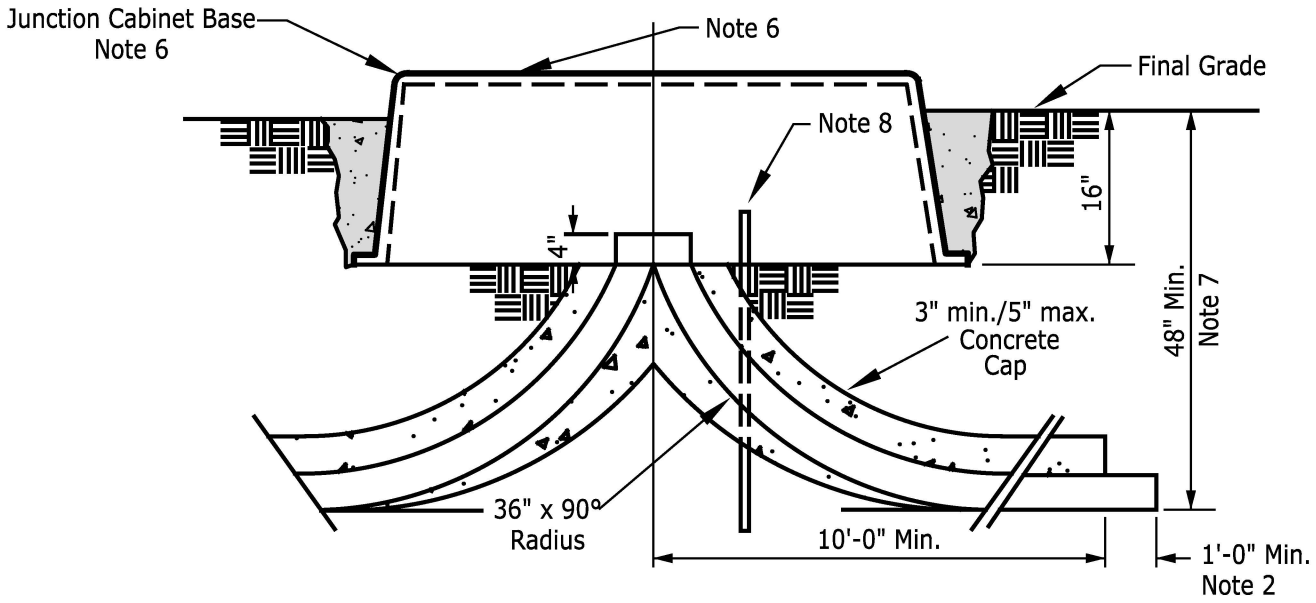

SECTION A-A

NOTES:

1. Customer to provide excavation (77" x 36" x 16" Deep) for junction cabinet placement. Soil must be compacted and level.
2. Customer to provide and install the 4 inch duct run(s) and 4 inch duct sweep(s) for future duct run(s) as depicted on the TEP construction drawing. Sweeps for future duct runs are to always be placed to the front of center of the junction cabinet base excavation (front being the side from which the junction cabinet will open, which will be shown on the construction drawing). Sweeps are to be extended one foot beyond their concrete encasement for future attachment.
3. See SR-207, Page 1 and SR-209, Page 1 for backfilling and trenching requirements.
4. See SR-205, Pages 1 and 2 for duct and concrete requirements.
5. Install an equipment protective barrier per SR-230 where cabinet is exposed to vehicular traffic.
6. The junction cabinet base is an integral part of the cabinet and will be provided by TEP and installed and backfilled by the customer. Base to be picked up by customer at District office.
7. Transition from 48 inch depth to 36 inch trench depth to be a gradual slope.
8. Customer to provide and install a 5/8" x 8'-0" copper coated ground rod prior to concrete being poured. The top of the rod shall be 6 inches above sub-grade.

EXCAVATION AND DUCT PLACEMENT FOR 1Ø JUNCTION CABINET (J1)

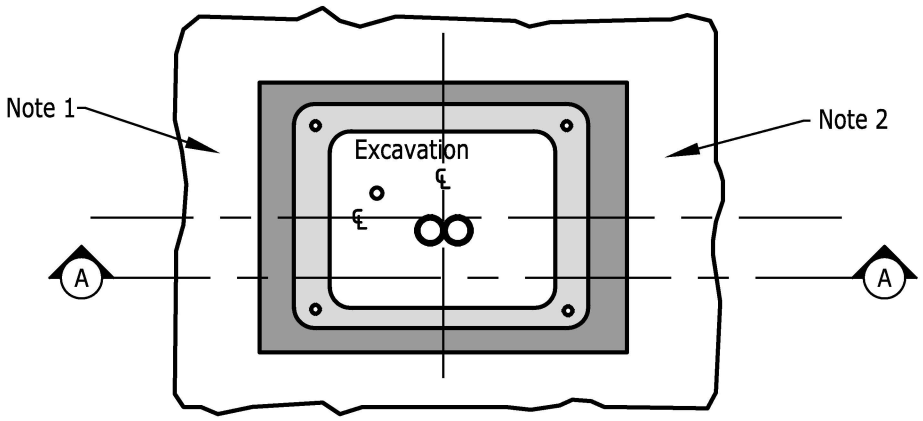

TOP VIEW - JUNCTION CABINET SITE

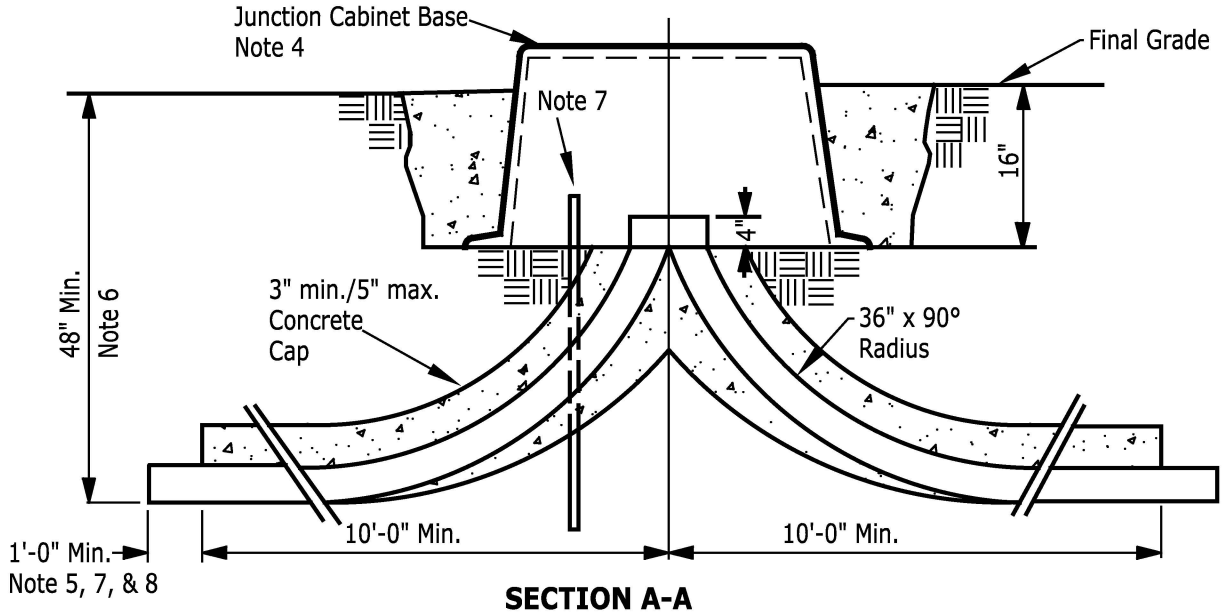

SECTION A-A

NOTES:

1. Customer to provide excavation (36" W x 36" D x 16" Deep) for junction cabinet placement. Soil must be compacted and level. Site preparation per SR-208.
2. See SR-209, Page 5 for placement and trenching, SR-207 for Trench Backfill.
3. Install an equipment protective barrier per SR-230 where cabinet is exposed to vehicular traffic.
4. The junction cabinet base is an integral part of the cabinet and will be provided by TEP and installed and backfilled by the customer. Base to be picked up by customer at District Office.
5. Customer to provide and install the 2 1/2 inch duct run(s) and 2 1/2 inch duct sweep(s) for future duct run(s) as depicted on the TEP construction drawing. Sweeps for future duct runs are to always be placed to the front center of the junction cabinet base excavation (front being the side from which the junction cabinet will open, which will be shown on the construction drawing). Sweeps are to extend 1 ft. beyond their concrete encasement for future attachment.
6. Transition from 48 inch depth to 36 inch trench depth to be a gradual slope.
7. Customer to install a 5/8" x 8'-0" copper coated ground rod prior to concrete being poured. The top of the rod shall be 6 inches above sub-grade. The ground rod shall be provided by TEP.
8. Conduit (duct run or sweeps) only as required, refer to the construction drawing.

BOX PAD INSTALLATION

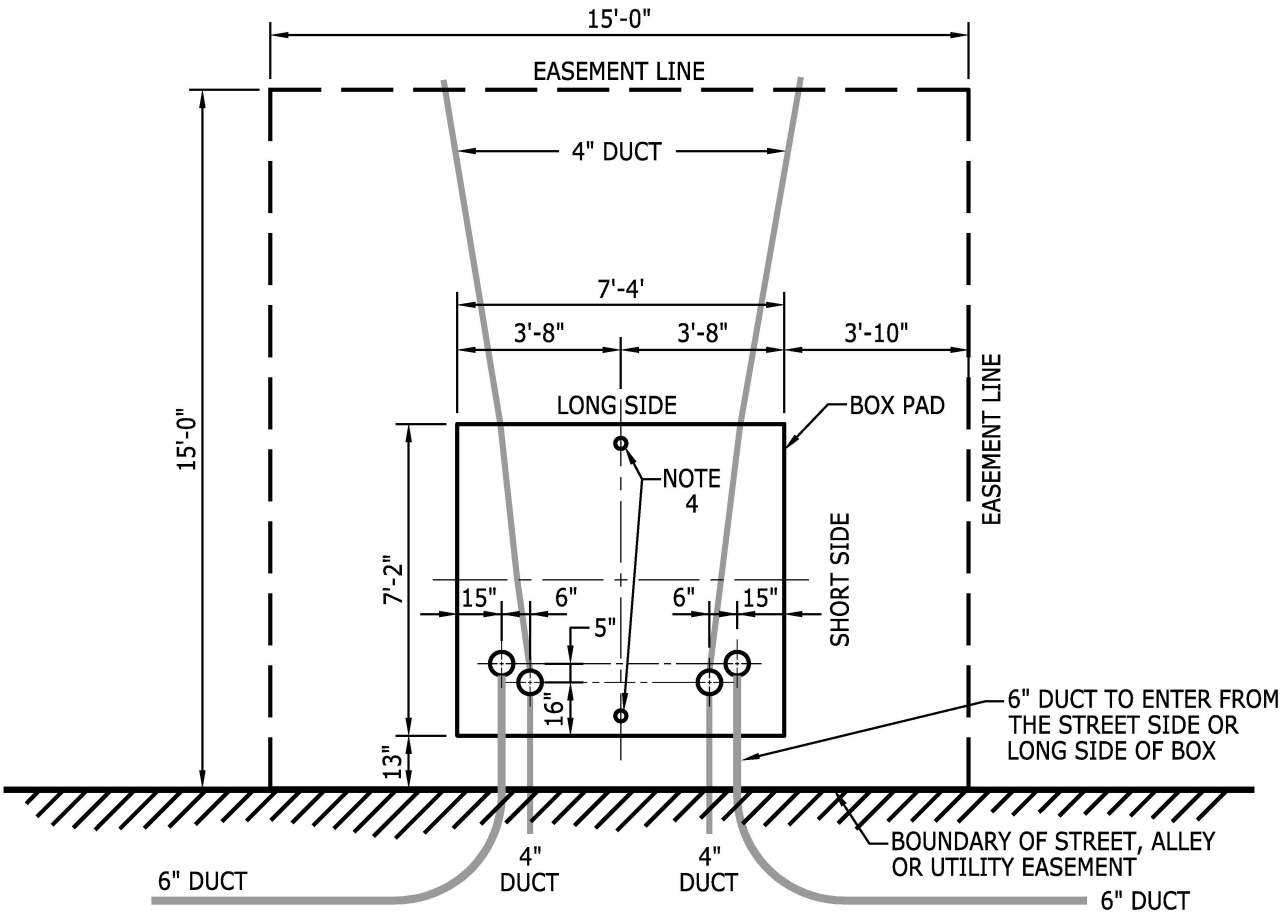

ITEMS TO BE PROVIDED AND INSTALLED BY CUSTOMER

1. All ducts require 3" min. / 5" max. concrete cap within 10 feet of box pad, as shown on page 2.

2. Prior to setting the box pad, the bottom of the excavation shall consist of a minimum of 3-inches of suitable material graded level and compacted to a minimum relative density of 95% of maximum at optimum moisture content. Suitable backfill shall be placed in 6-inch lifts to grade. Each lift shall be compacted to a minimum relative density of 95% of maximum at optimum moisture content.

3. Box Pad - Approved Manufacturers:
   Jensen Precast - SR-240 (Concrete)(Polymer-Concrete) Quazite (Strongwell) PB74766267B36
   748-1607- Tucson
   Oldcastle Precast- 6464 (Concrete) FAX 480-963-2678 - Chandler, AZ.
   Hayden Concrete - SR-240 (Concrete) 520-682-2566 - Tucson

4. Customer to provide and install (2) 5/8" x 8'-0" ground rods prior to concrete being poured. The top 12 inches of the rod shall extend above sub-grade. The rods shall be located along the left to right center line and 6 inches inside of the box pads upper lip.

NOTE:
Duct shown for reference only. For exact location and duct size (including sweep(s) for future duct), see construction drawing prepared by Design Services. Sweeps for future duct are to be extended one foot beyond their concrete encasement for future attachment.

TEP Tucson Electric Power / UniSourceEnergy SERVICES SANTA CRUZ COUNTY	INITIATED BY	SC	REVISION NO.	24	SR-240 24
			ESR COMM.	10-17	
	ESR COMM.	8-78	EFFECTIVE DATE	10-17	Pg. 1 of 4

BOX PAD INSTALLATION

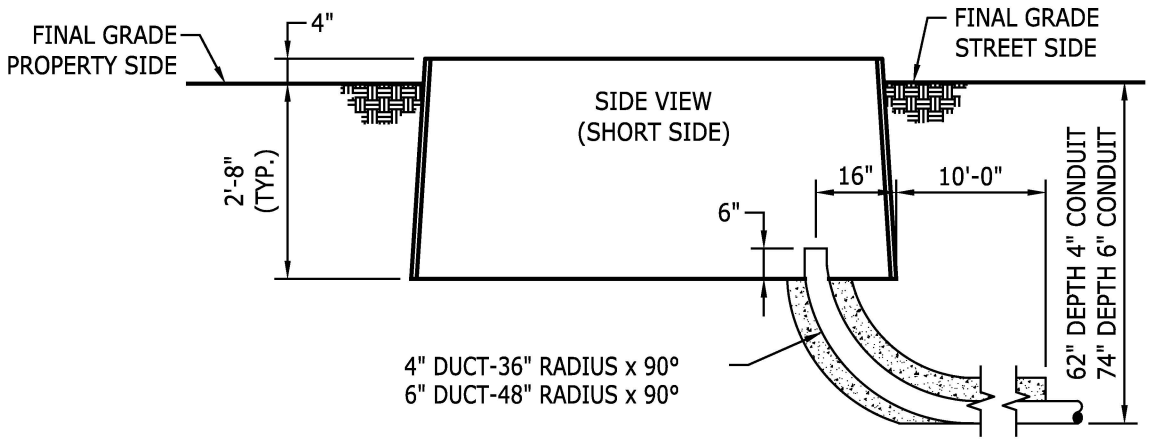

DUCT LOCATION WHEN LEAVING TOWARD STREET/ALLEY/UTILITY EASEMENT

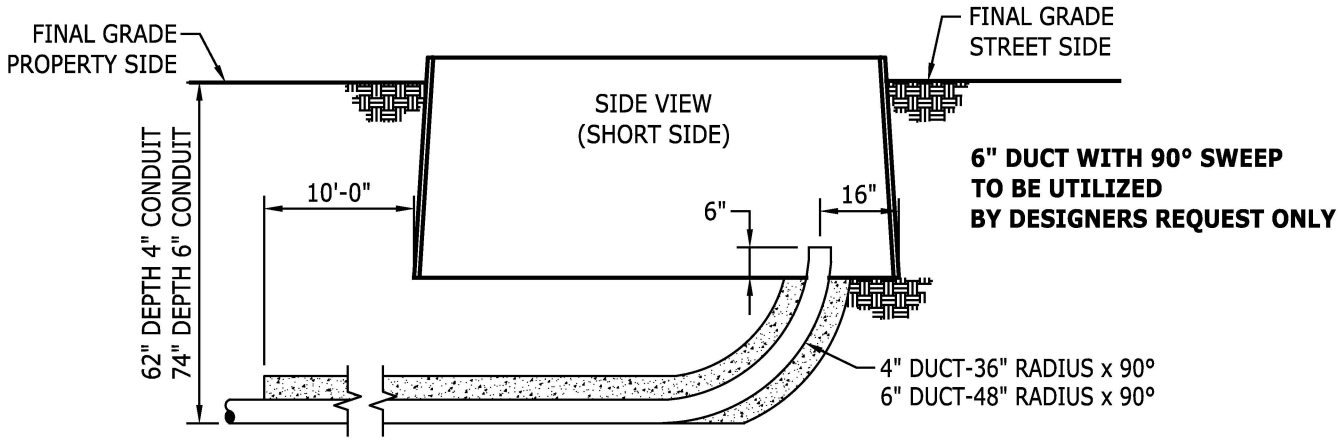

DUCT LOCATION WHEN LEAVING TOWARD PROPERTY

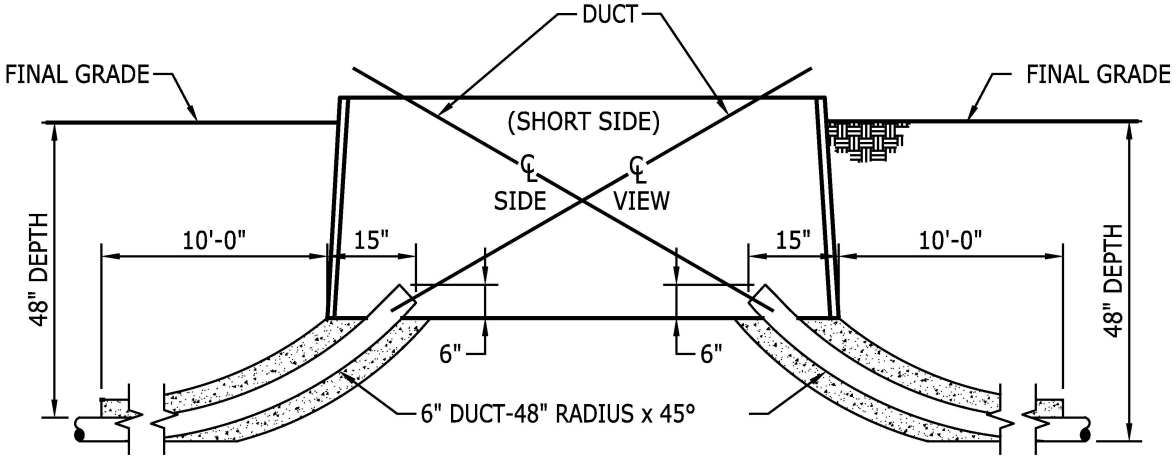

ENTERING AND LEAVING FROM STREET/ALLEY/UTILITY EASEMENT

TEP Tucson Electric Power / UniSourceEnergy SERVICES SANTA CRUZ COUNTY	INITIATED BY	SC	REVISION NO.	11	SR-240 11
			ESR COMM.	10-17	Pg. 2 of 4
	ESR COMM.	8-78	EFFECTIVE DATE	10-17	

PAD, BOX (CONCRETE) 7

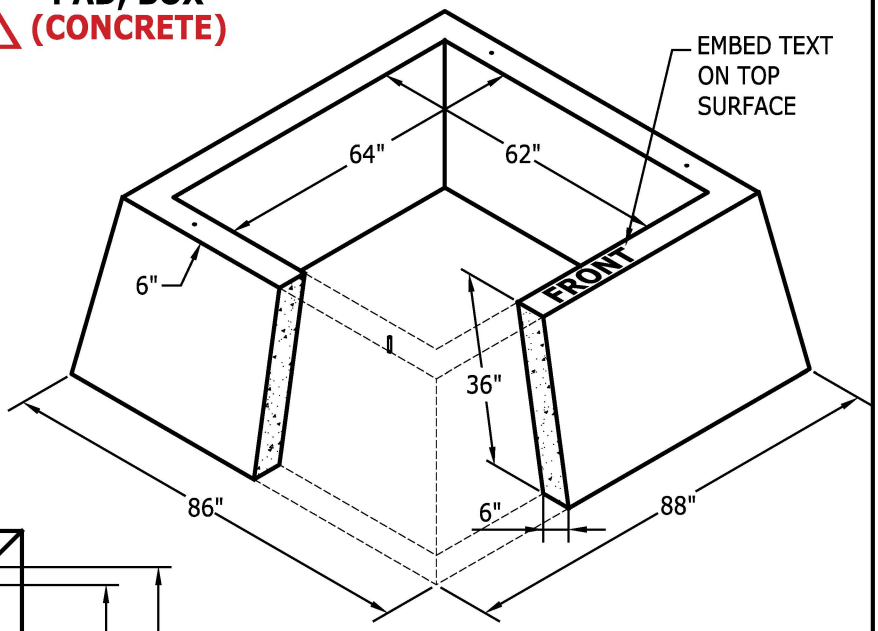

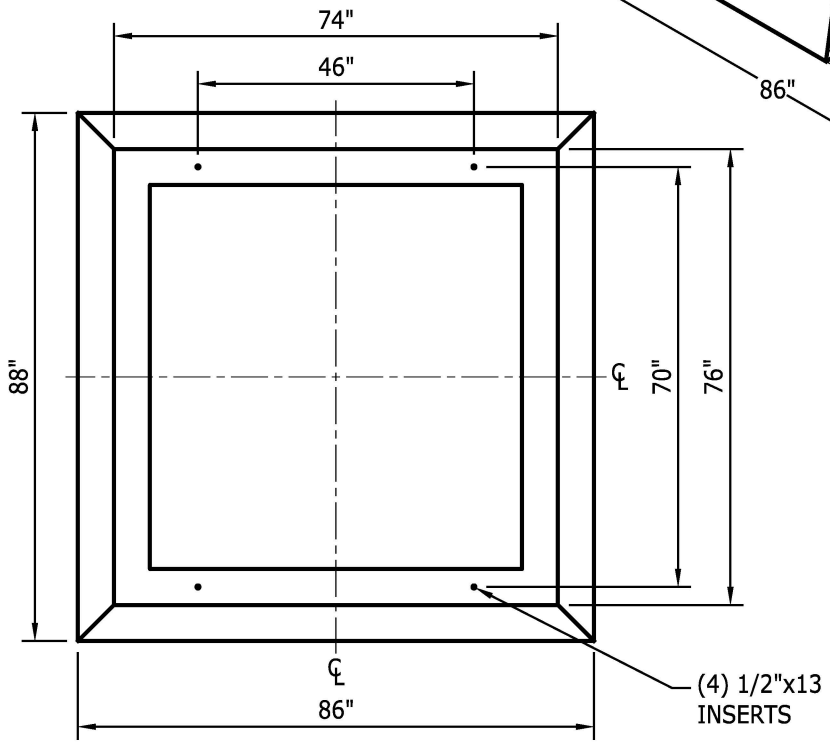

TOP VIEW

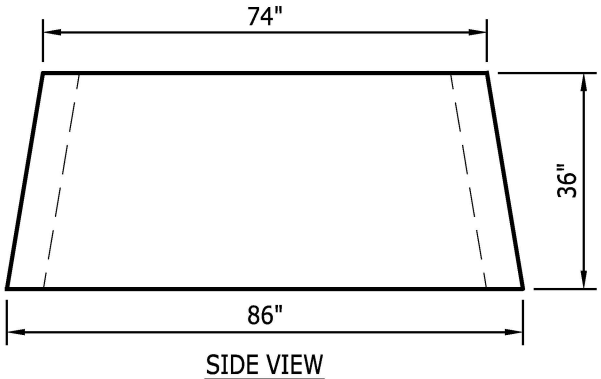

SIDE VIEW

MATERAL: PRECAST CONCRETE
WEIGHT: 5700 LBS.
STORES No: 7-48-1450

NOTE:
1. MANUFACTURER TO CHAMFER INSIDE AND OUTSIDE EDGES AT 45 DEGREES.

PAD, BOX
(POLYMER CONCRETE)

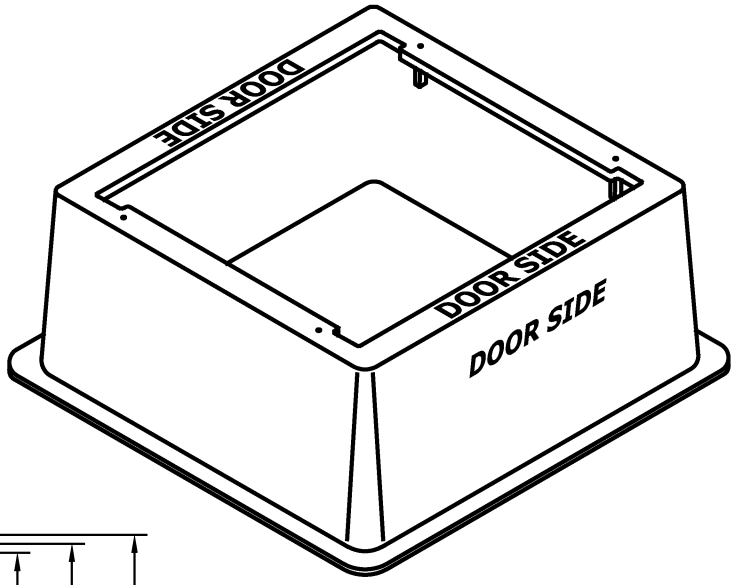

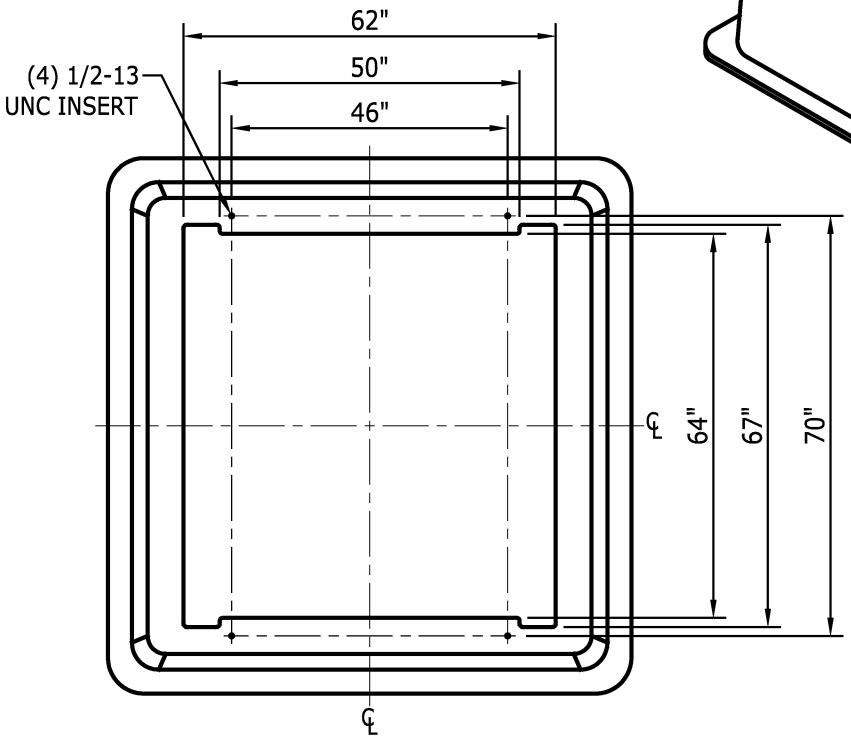

TOP VIEW

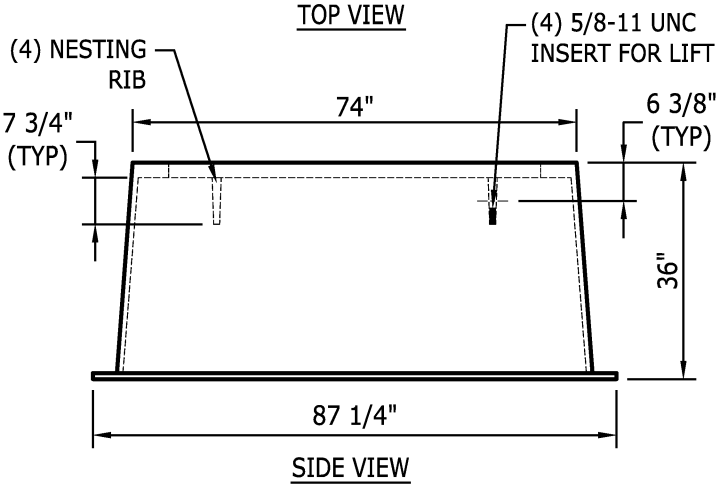

SIDE VIEW

NOTES:

1. ONE INCH HIGH BLACK LETTERING TO BE STENCILED ON TOP AND SIDES AS SHOWN. LETTERING ON THE SIDE WALLS TO BE 12 INCHES BELOW TOP OF BOX PAD.
2. FURNISHED WITH (4) 5/8-11 UNC x 3 INCHES LONG, HEX HEAD BOLTS.

MATERAL: POLYMER CONCRETE
WEIGHT: 850 LBS.
STORES No: 7-48-1450

CAPACITOR INSTALLATION - PAD MOUNT
1200 kVAR

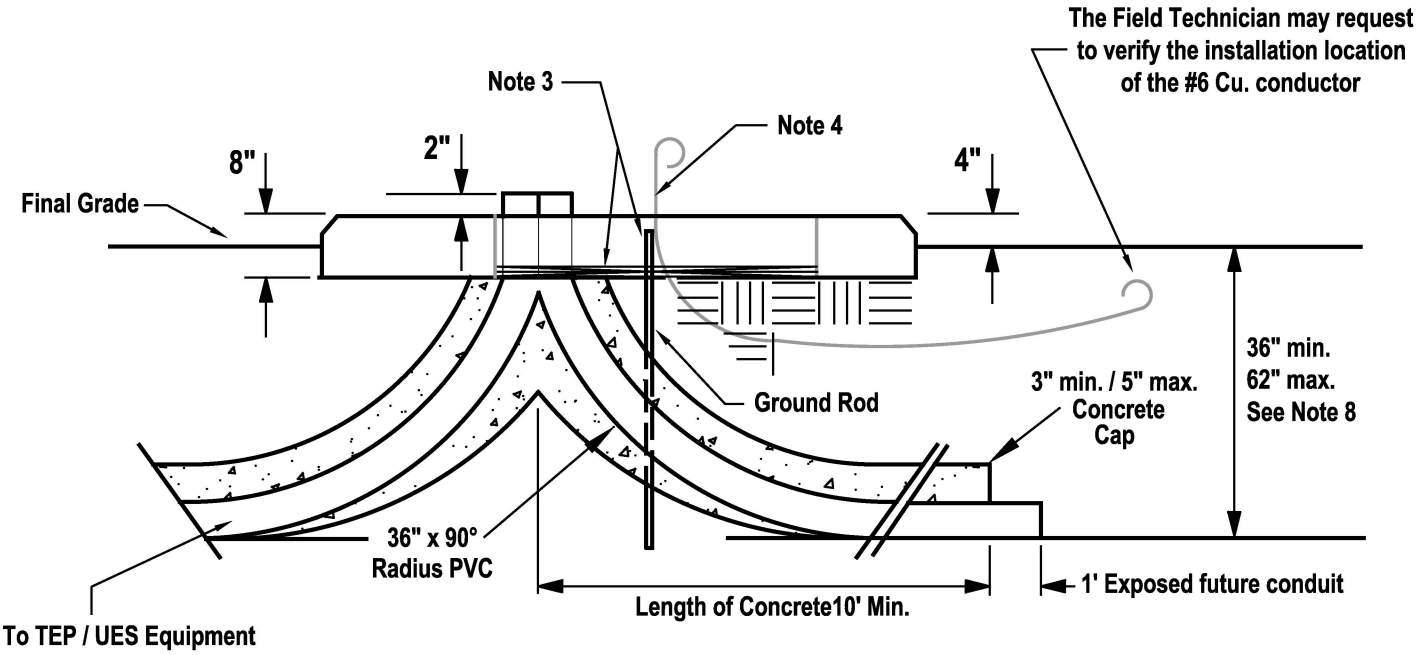

NOTES:

1. Customer to excavate per SR-215 for the installation of a 4" conduit system.

2. Customer to provide and install the 4" conduit system and conduit sweep with stub for future use as depicted on the TEP or UES construction drawing. Conduit stubs are to be extended one foot beyond their concrete encasement for future attachment. See SR-205 for the approved conduit and concrete installation. See SR-218 for the stub installation

3. Customer to provide and install a 5/8" x 8' copper coated ground rod 2" below the top of the pad with 1/2" mortar slurry in the pad opening. Driven ground rod to be within 6" of final grade (NESC 094B2) Note: Ground Rods are Not Permitted to be cut under any circumstance. If soil conditions prohibit driving the ground rod per the SR, contact TEP's Design department.

4. Customer to provide and install a #6 Cu. conductor for Telco bonding from the center front primary duct opening to a point 12" in front of pad and in line with right edge, 12" below final grade. Leave at least 2' of #6 conductor above top of pad.

5. Customer to backfill per SR-207

6. Customer to provide and install a Figure 1 pad per SR-233.

7. Customer to provide and install equipment protective barriers per SR-230 (If required) .

8. When the capacitor is installed within the approximate location of a PME / PMH, the trench depth will be 62". See SR-240.

9. Do Not trench under TEP / UES underground equipment without the presence of an Access Crew. For conduit installation and placement into existing underground equipment, contact Access at 918-8300 (761-7952 UES) .

TEP or UES to install the primary cable and pad mounted capacitor .

Tucson Electric Power / UniSourceEnergy Services SANTA CRUZ COUNTY	INITIATED BY	GC	REVISION NO.	3	SR-241 Pg. 1 of 1
			ESR COMM.	3-16	
	ESR COMM.	6-08	EFFECTIVE DATE	4-16	

GAS INSULATED SWITCH INSTALLATION

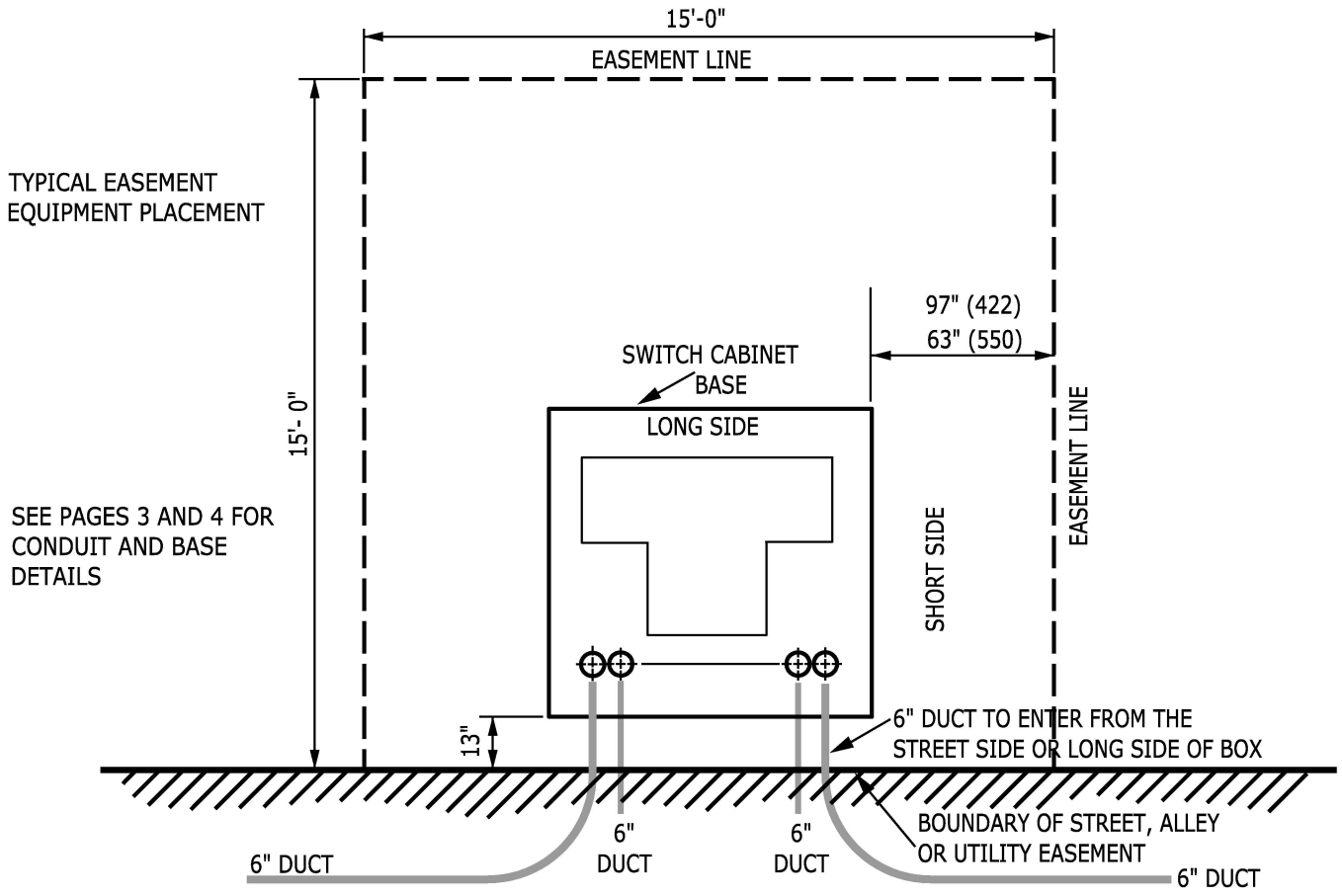

ITEMS TO BE PROVIDED AND INSTALLED BY CUSTOMER

1. All ducts require 3" min. / 5" max. concrete cap within 10 feet of switch cabinet base, as shown on Page 2.
2. Prior to setting the switch cabinet base, the bottom of the excavation shall consist of a minimum of 3 inches of suitable material graded level and compacted to a minimum relative density of 95% relative to a standard proctor density (ASTM D698) of maximum at optimum moisture content. Suitable backfill shall be placed in 6 inch lifts to grade. Each lift shall be compacted to a minimum relative density of 95% relative to a standard proctor density (ASTM D698)maximum at optimum moisture content.
3. Switch Cabinet Base- Approved manufacturers:

   Concast Inc.

   Catalog numbers- 422 Base:FC-69-83-36-V

   550 Base:FC-69-106-36-V

   Contact Border States Electric @ 520-294-1414 for obtaining either base.
4. Customer to provide and install (2) 5/8" x 8'-0" ground rods prior to concrete being poured. The top 12" of the rod shall extend above sub-grade. The field tech shall provide the placement location.

NOTE:

Duct shown for reference only. For exact location and duct size (including sweep(s) for future duct), see construction drawing prepared by TEP or UES. Sweeps for future duct are to be extended one foot beyond their concrete encasement for future attachment.

GAS INSULATED SWITCH INSTALLATION

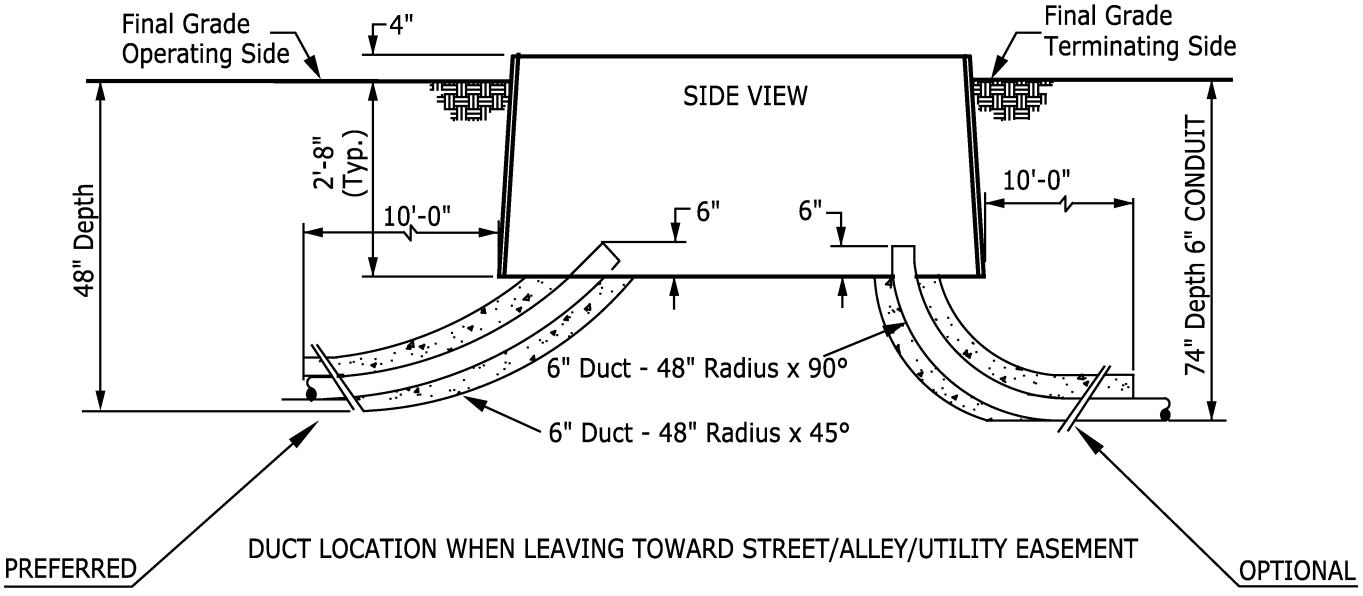

DESIGNER TO DETERMINE QUANTITY AND PLACEMENT OF CONDUITS

GAS INSULATED SWITCH - 422 BASE

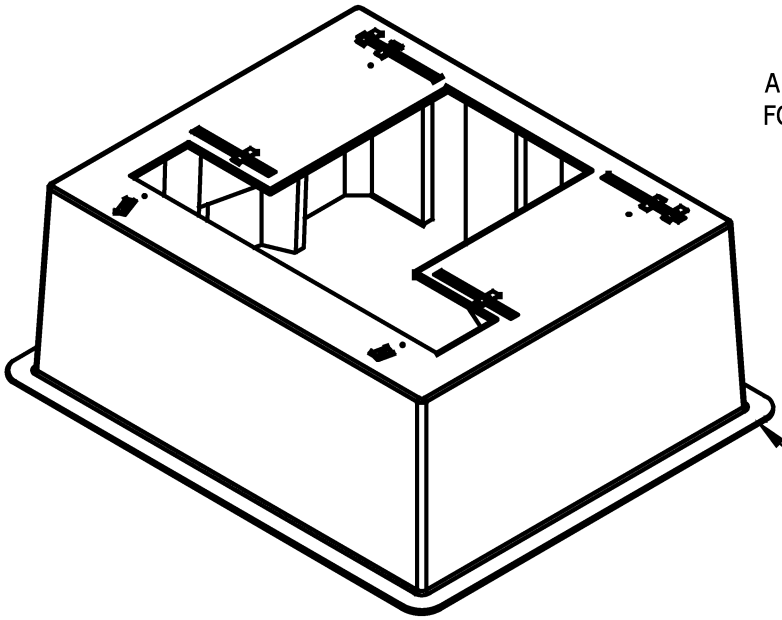

APPROVED BASE: CONCAST
FC69-83-36-V

FIBER REINFORCED
CONCRETE

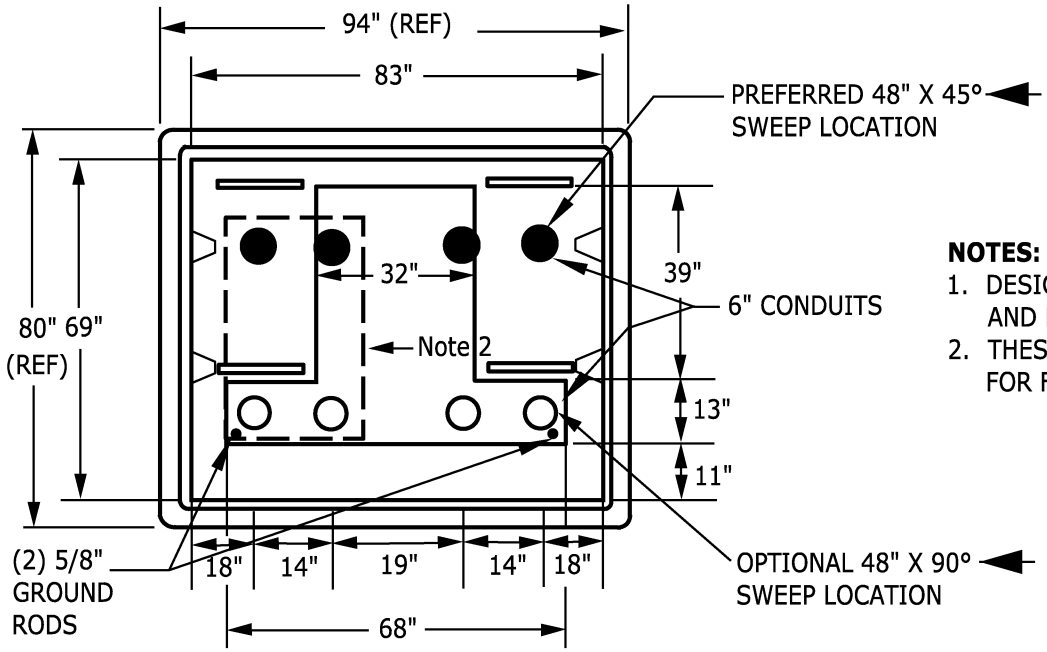

NOTES:
1. DESIGNER TO DETERMINE QUANTITY AND PLACEMENT OF CONDUITS
2. THESE POSITIONS ARE DESIGNATED FOR FAULT INTERRUPTION

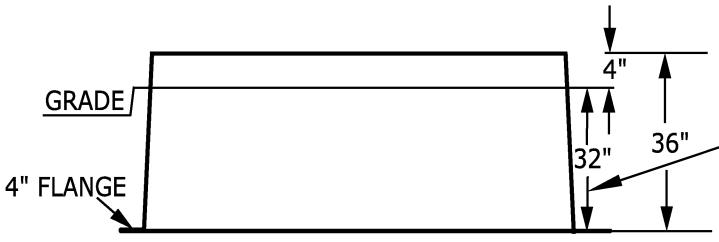

MINIMUM SUB GRADE EXCAVATION DIMENSION IS 32". CONTRACTOR IS TO SCHEDULE A CONDUIT PLACEMENT MEETING WITH THE FIELD TECHNICIAN PRIOR TO INSTALLATION.

FITS THE FOLLOWING SWITCH ENCLOSURE SIZES : 61" x 72", 65" x 72", 65" x 79"

TEP Tucson Electric Power / UniSourceEnergy SERVICES SANTA CRUZ COUNTY	INITIATED BY	MRH	REVISION NO.	1	SR-242 Pg. 3 of 4
			ESR COMM.	5-13	
	ESR COMM.	7-12	EFFECTIVE DATE	6-13	

GAS INSULATED SWITCH - 550 BASE

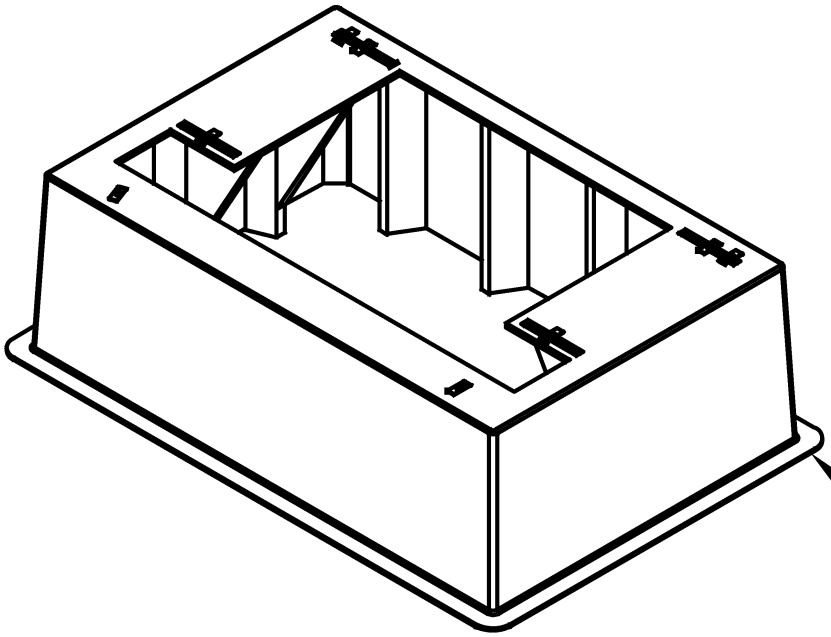

APPROVED BASE: CONCAST-
FC-69-106-36-V

FIBER REINFORCED CONCRETE

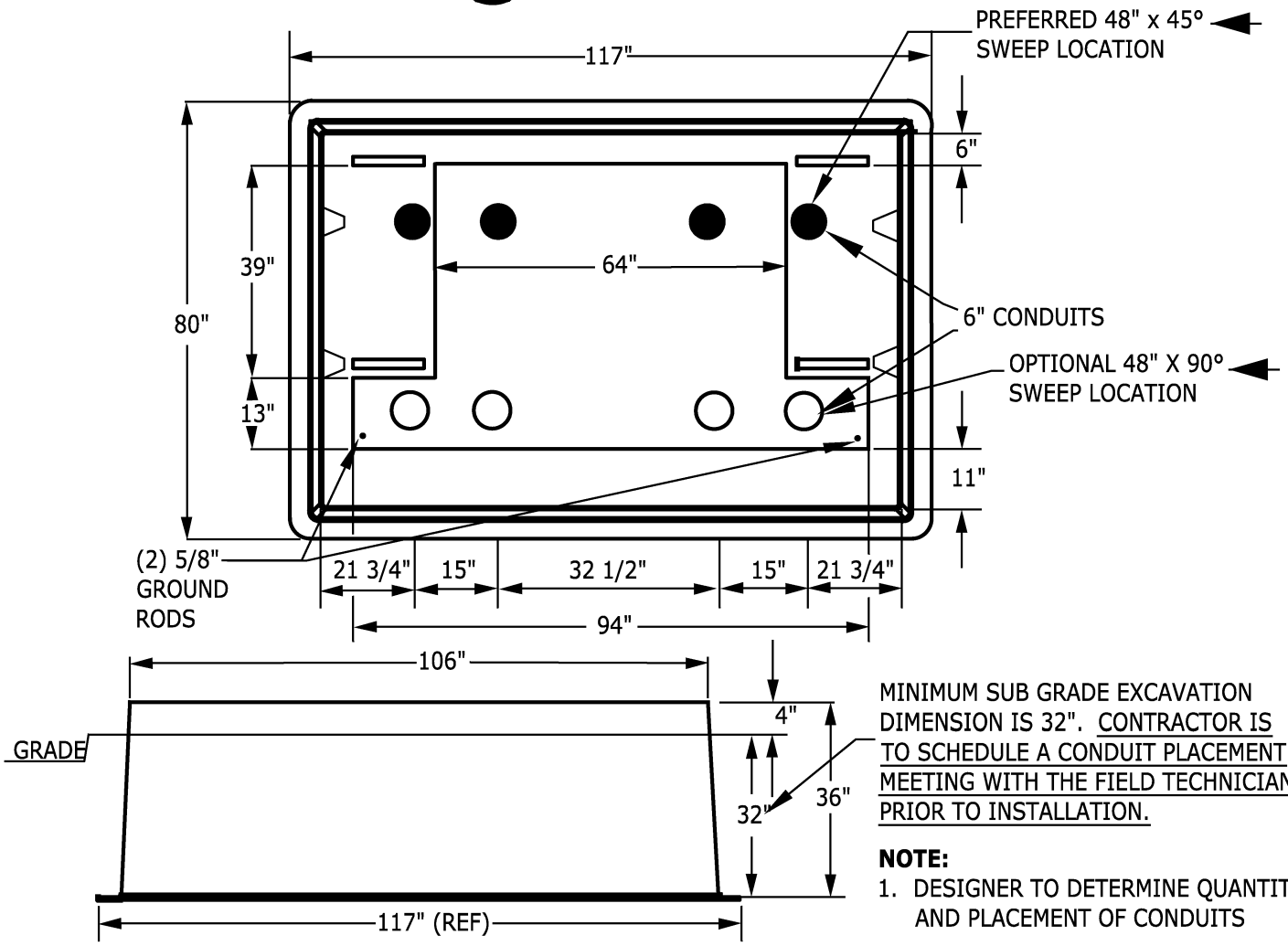

MINIMUM SUB GRADE EXCAVATION DIMENSION IS 32". CONTRACTOR IS TO SCHEDULE A CONDUIT PLACEMENT MEETING WITH THE FIELD TECHNICIAN PRIOR TO INSTALLATION.

NOTE:

1. DESIGNER TO DETERMINE QUANTITY AND PLACEMENT OF CONDUITS

FITS THE FOLLOWING SWITCH ENCLOSURE SIZES
61" x 102", 65" x 102"

300
SERVICES SECTION

ENTRANCE FACILITIES	Page
Load Balancing	3.01
Typical Service Entrances	
Socket Wiring	
Electric Service Lines	
Overhead Service Lines	3.01
Underground Service Lines	
Service Trenches	

SR	STANDARDS
304	Overhead or Underground Service and Meter Location
305	Service Entrance with Conduit Riser Overhead
307	Service Entrance on a Pole
308	Single-Phase 401A - 600A, Three-Phase Underground Service from Overhead, 600A
308A	Single-Phase Underground Service from Overhead, 400A
309	Three-Phase Underground Service from Pad-Mounted Transformer
310	Service Entrance Underground
312	Trenching, Service Single-Phase
314	Service Entrance Temporary, Underground

ENTRANCE FACILITIES

LOAD BALANCING

Contractors and other installing electrical work are to balance the load on three-wire and four-wire systems. This is advantageous to the customer and to TEP because it will give the customer better voltage regulation and maximum use of service entrance equipment.

TYPICAL SERVICE ENTRANCES

Typical service entrances for residences shall be installed in accordance with TEP Standards SR-305, SR-310, SR-405, & SR-408. Service termination requirements for underground service to multiple metered installations are depicted on SR-425 & SR-426. Service entrance size for both residential and commercial installations is defined to be the nameplate ampere rating of the associated panelboard or switchboard.

SOCKET WIRING

Meter socket will be wired in accordance with TEP Standards, series SR-400.

ELECTRIC SERVICE LINES

OVERHEAD SERVICE LINES

TEP will install 1 span of overhead service line to the customer's approved point of attachment from the last pole on the overhead distribution system.

UNDERGROUND SERVICE LINES

TEP normally will install an underground service line to a residence in a customer-provided conduit system. For residences exceeding 300 amp service rating, commercial, and other installations, the customer should contact TEP to determine the point of delivery and the resultant responsibilities for installation.

SERVICE TRENCHES

Trenching and conduit system for service will be in accordance with trenching and meter location standards SR-312 and SR-405. The location and routing of the service trench made necessary by noncompliance with these requirements will be made by the customer at his expense.

Use: Single dwelling electric meter locations (residential) where power line is along the alley or rear property line.

OH OR UG SERVICE AND METER LOCATION
REAR PROPERTY LINE UTILITY PLACEMENT

The architects plans will not determine the meter location. Aesthetic concerns, see SR-405 Pg. 10 of 10.

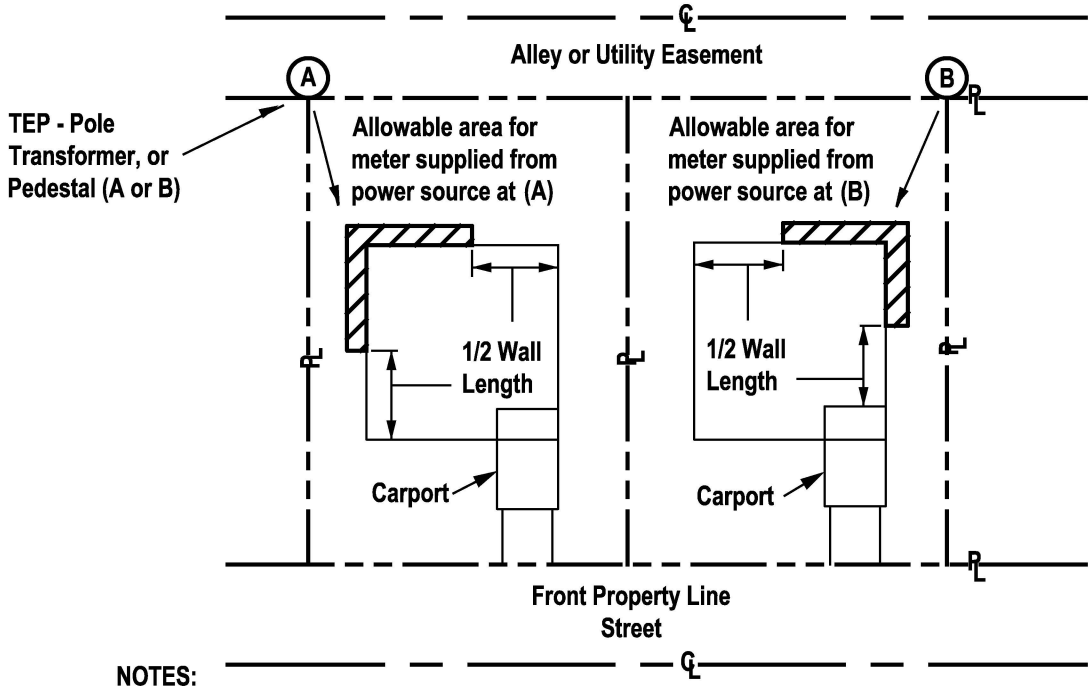

NOTES:

1. Rear property line utility placement requires the meter to be located within one-half (1/2) the length of the rear or side wall nearest the designated power source (Closest quadrant).

2. The lot corner from which the meter is to be served shall be designated by a TEP representative.

3. All meters shall be located on an exterior house or garage wall, but not under a carport, breezeway, patio, porch, or area that can be enclosed with building expansion.

4. The meter shall be accessible for reading, connecting, disconnecting, testing and maintenance without requiring passage through restricted private areas, locked gates or fences. TEP reserves the right to determine final meter location. Patio walls shall not extend above horizontal line of sight to meter. (See SR-405, Pages 3, 4, and 5.)

5. In townhouse developments where side wall locations are not available, meter may be located anywhere on rear wall.

6. See SR-305 for overhead service entrance installation details.

7. See SR-310 for underground service entrance detail and SR-312 for trenching detail.

8. For power line along the street, refer to SR-304 Page 2.

9. For additional information in regards to meter locations, call the Design Department.

10. Overhead services over 100' in length will require the installation of a service lift pole.

USE: Single dwelling electric meter locations (residential) where power line is along the street or front property line.

OH OR UG SERVICE AND METER LOCATION
FRONT PROPERTY LINE UTILITY PLACEMENT

The architects plans will not determine the meter location. Aesthetic concerns, see SR-405 Pg. 10 of 10.

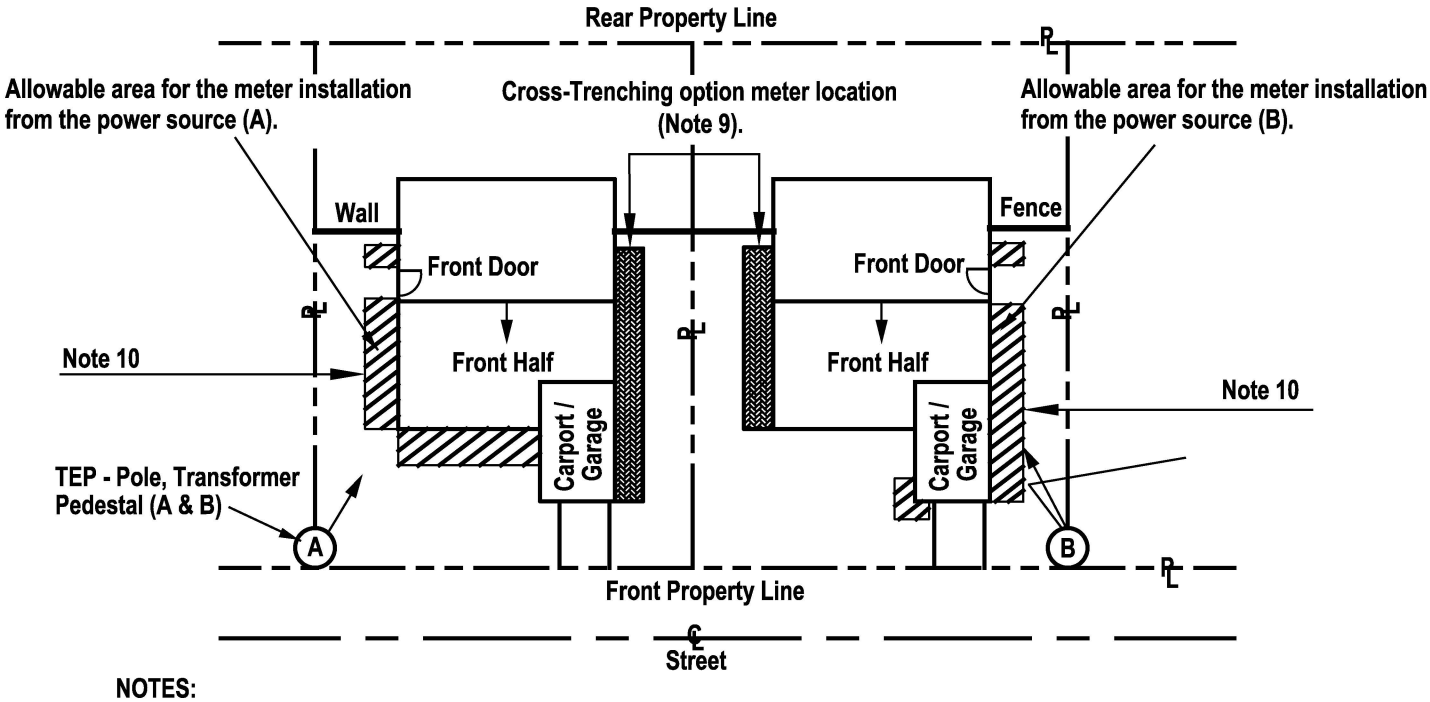

NOTES:

1. Front property line utility placement requires the meter to be located within one-half (1/2) the length of the front or side wall nearest to designated power source, (closest quadrant) on overhead service installations.

2. The lot corner from which the meter is to be served shall be designated by TEP, and for subdivisions, will be depicted on TEP's construction drawing of the underground electrical distribution system.

3. All meters shall be located on an exterior house or garage wall, but not under a carport, breezeway, patio, porch, or area that can be enclosed with building expansion.

4. The meter shall be accessible for reading, connecting, disconnecting, testing and maintenance without requiring passage through restricted private areas including fenced or walled-in areas. TEP reserves the right to determine meter location.

5. See SR-305 for overhead service entrance installation details.

6. See SR-310 for underground service entrance detail and SR-312 for trenching detail.

7. For power line along alley or rear property line, refer to SR-304, Pg. 1. For additional information in regards to meter locations, call the Design Department.

8. Overhead services over 100' in length will require the installation of a service lift pole.

9. The underground service length (cross-trenching) is to be 100' or less, Schedule 40 PVC or HDPE conduit must be used and it may have no greater than 360º of bends within the conduit run. The meter will be located in front of any wall or fence. Contact the Design Department for approval prior to panel installation and trench excavation.

10. 2 1/2" DB-120 PVC electrical conduit may be used for straight runs in service installations when the meter location is on the same side as the utility source. The sweeps and connectors shall be Schedule 40 PVC, no greater than 270º of bends within the conduit run. The maximum service length is 250'.

USE: ENTRANCE REQUIREMENTS ON A BUILDING

SERVICE ENTRANCE WITH CONDUIT RISER OVERHEAD

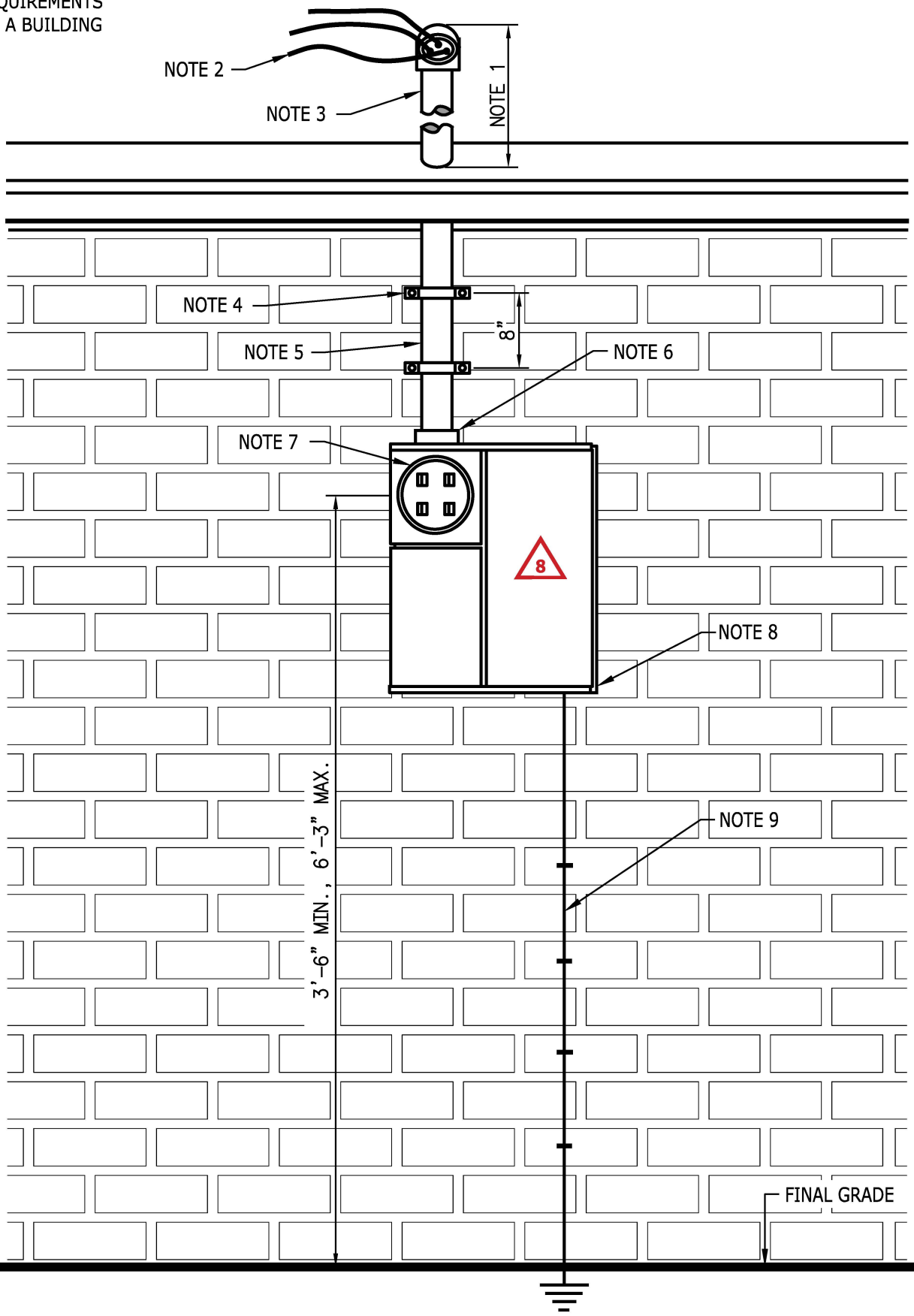

TEP Tucson Electric Power / UniSourceEnergy SERVICES SANTA CRUZ COUNTY	INITIATED BY	SC	REVISION NO.	8	SR-305 Pg. 1 of 5
			ESR COMM.	10-90	
	ESR COMM.	12-67	EFFECTIVE DATE	1-91	

USE: PARAPET WALL INSTALLATION

SERVICE ENTRANCE WITH CONDUIT RISER OVERHEAD

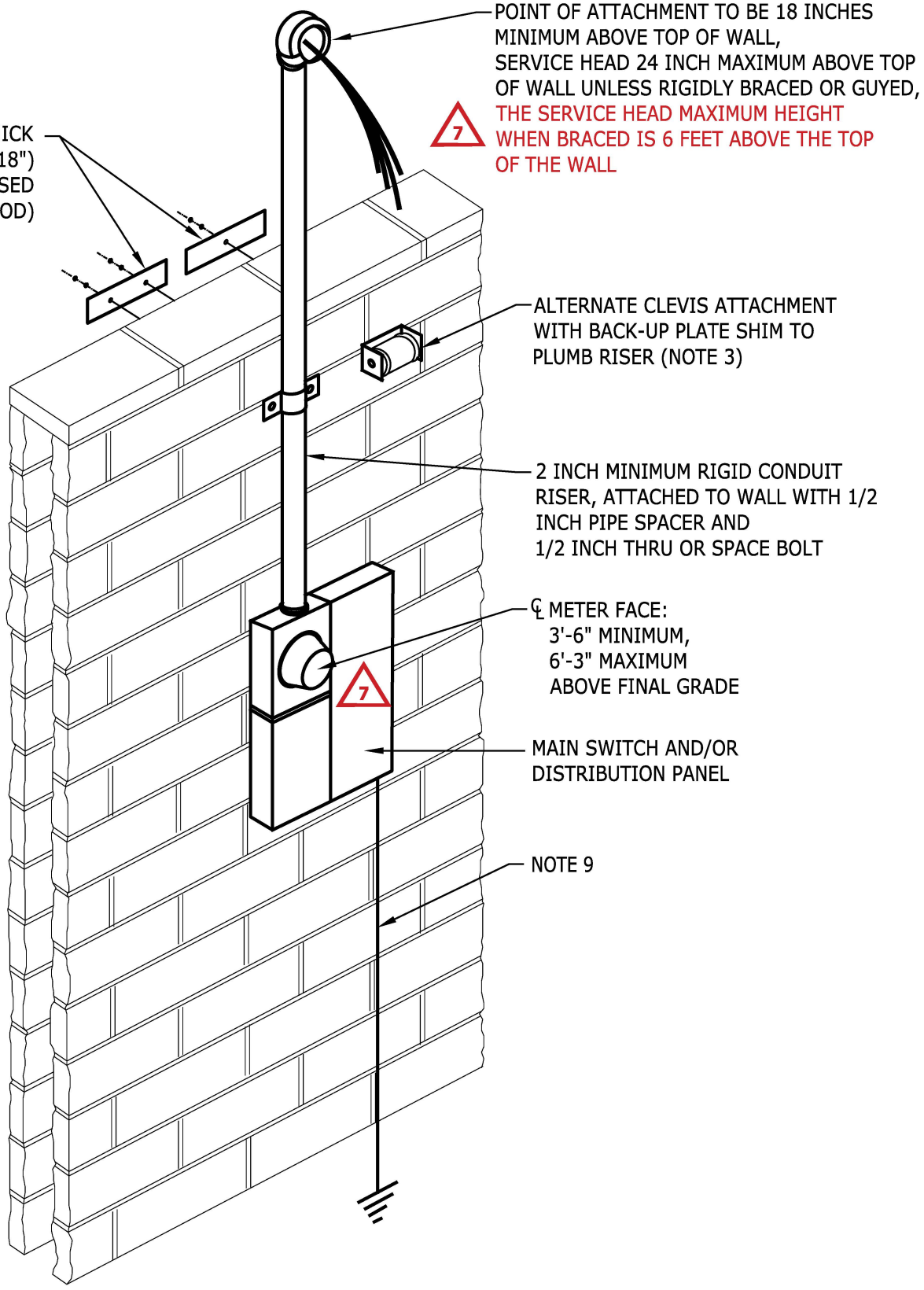

TEP Tucson Electric Power / UniSourceEnergy SERVICES SANTA CRUZ COUNTY	INITIATED BY	SC	REVISION NO.	7	SR-305 Pg. 2 of 5
			ESR COMM.	11-06	
	ESR COMM.	10-77	EFFECTIVE DATE	11-06	

USE: ENTRANCE REQUIREMENTS ON A BUILDING

SERVICE ENTRANCE WITH CONDUIT RISER OVERHEAD

NOTES:

1. A self-supported rigid conduit riser may extend a maximum of 3 feet above the roof if 2 inch diameter conduit is used or 4 feet above the roof if 2 1/2 inch diameter conduit is used. The top of the weatherhead shall be a minimum of 24 inches above the roof. If additional riser height is needed for service conductor clearance as required by applicable electrical codes, the riser shall be rigidly braced or guyed from a point within 8 inches of the weatherhead. The maximum height of the weatherhead from the roof is 7 feet. No conduit coupling shall be installed above the roofline.

6

2. Entrance conductors shall extend at least 24 inches from the conduit or cable weatherhead. The neutral conductor shall be identified. When grouping with multiple risers, the entrance conductors shall extend at least 48 inches to allow for permanent connections.

3. A firm point of attachment for Service Provider service wires shall be provided by the customer; for example, a well-anchored rigid conduit mast, a suitable dead-end clevis and bolt arrangement furnished by Service Provider and installed by the customer in masonry walls, or other attachments as field conditions may warrant. Wood masts are no longer acceptable for new or remodeled points of attachment. See Note 11 for height of the attachment point above final grade.

6

4. Conduit risers must be clamped solidly to the building for adequate support of the service drop cable. Where rafters extend beyond the wall line, the conduit riser shall be firmly braced and/or blocked between the rafters with 2x4 or 2x6 inch lumber. Where no rafters extend beyond the wall line, the conduit risers must be firmly secured to the masonry wall with a minimum of two 2-hole pipe straps located near the top of the wall and spaced no less than 8 inches apart. Conduit straps shall be attached with 1/4 inch minimum toggle bolts or 1/4 inch minimum lag screws in lag shield anchors. Consult Design Services for means of attachment to adobe walls or other masonry.

5. The smallest diameter conduit for entrance risers which support service drop cable shall be 2 inches.

6

6. If utilized, a meter board 10"x22"x3/4" or larger, treated for outdoor application, shall be fastened securely to the building wall for mounting meter sockets, switches, and other devices necessary for adequate metering and protection. Other mounting arrangements are subject to approval by Design Services.

7. Meters and instrument transformers will be furnished by the Service Provider. Meter sockets are to be purchased, installed and maintained by the customer per SR-400 Series.

6

8. The customer will provide a service disconnecting device which meets all requirements of the current National Electrical Code. The operation of the device shall be such that the neutral (grounded conductor) is not broken when the device is opened. The operating handle or member should be capable of being sealed either open or closed.

USE: ENTRANCE REQUIREMENTS ON A BUILDING

SERVICE ENTRANCE WITH CONDUIT RISER OVERHEAD

NOTES (CONT'D):

9. The service disconnect shall be effectively grounded in compliance with the applicable requirements of local governmental codes, or National Electrical Code requirements in the absence of local codes.

6 10. Contact the Design Services if building structure is not similar to SR-305, Pages 1 & 2.

6 11. The point of attachment on the customer's building must be at a sufficient height, to provide the following minimum ground clearances to the Service Provider service drop cable (0-750V).

   A. Over parking lots, service areas, public streets, alleys or driveways open to the public or areas reasonably expected to be subject to equestrian activity, 18 feet.

   B. Over private residential driveways and spaces or ways accessible to pedestrians only, 15 feet. May be reduced to 12 feet for supply conductors limited to 300V to ground and located more than 25 feet measured in any direction from a swimming pool or diving platform.

6 12. If more than one meter socket is installed, the centerline of each meter is to be a minimum of 3'-6" above final grade. Maximum meter height above grade, as measured from meter centerline, is 6'-3".

USE: REPLACEMENT OF A ROOF MOUNTED POINT OF ATTACHMENT (POA)

SERVICE ATTACHMENT SUPPORT

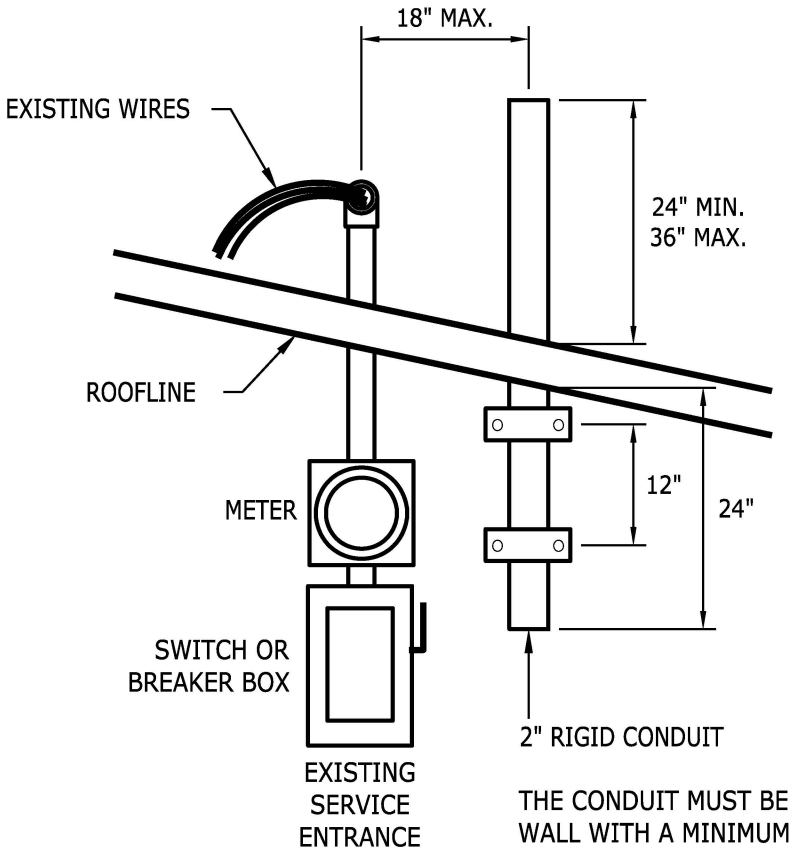

THE CONDUIT MUST BE FIRMLY SECURED TO THE WALL WITH A MINIMUM OF TWO 2-HOLE PIPE STRAPS ATTACHED WITH 1/4 INCH MINIMUM TOGGLE BOLTS OR 1/4 INCH MINIMUM LAG SCREWS IN LAG SHIELD ANCHORS

NOTES:

1. POA TO BE LOCATED NOT MORE THAN 18 INCHES FROM ELECTRIC SERVICE RISER.
12 2. WHEN WORK IS COMPLETED, CALL DESIGN SERVICES FOR INSPECTION.
12 3. IF YOU NEED TO DEVIATE FROM THIS PREFERRED SERVICE INSTALLATION, PLEASE CONSULT WITH DESIGN SERVICES BEFORE INSTALLATION.
12 4. **TEP** – AN INSULATED WIRE HOLDER FOR ATTACHMENT OF SERVICE WIRE TO CONDUIT WILL BE PROVIDED.
12 5. **UES SANTA CRUZ** – CUSTOMER TO PROVIDE AN INSULATED WIRE HOLDER FOR ATTACHMENT OF SERVICE WIRE TO CONDUIT.

SERVICE ENTRANCE ON A POLE

USE:
ENTRANCE REQUIREMENTS ON A SERVICE POLE.

Refer to SR-452 for the complete Approved Metering and Service Equipment list

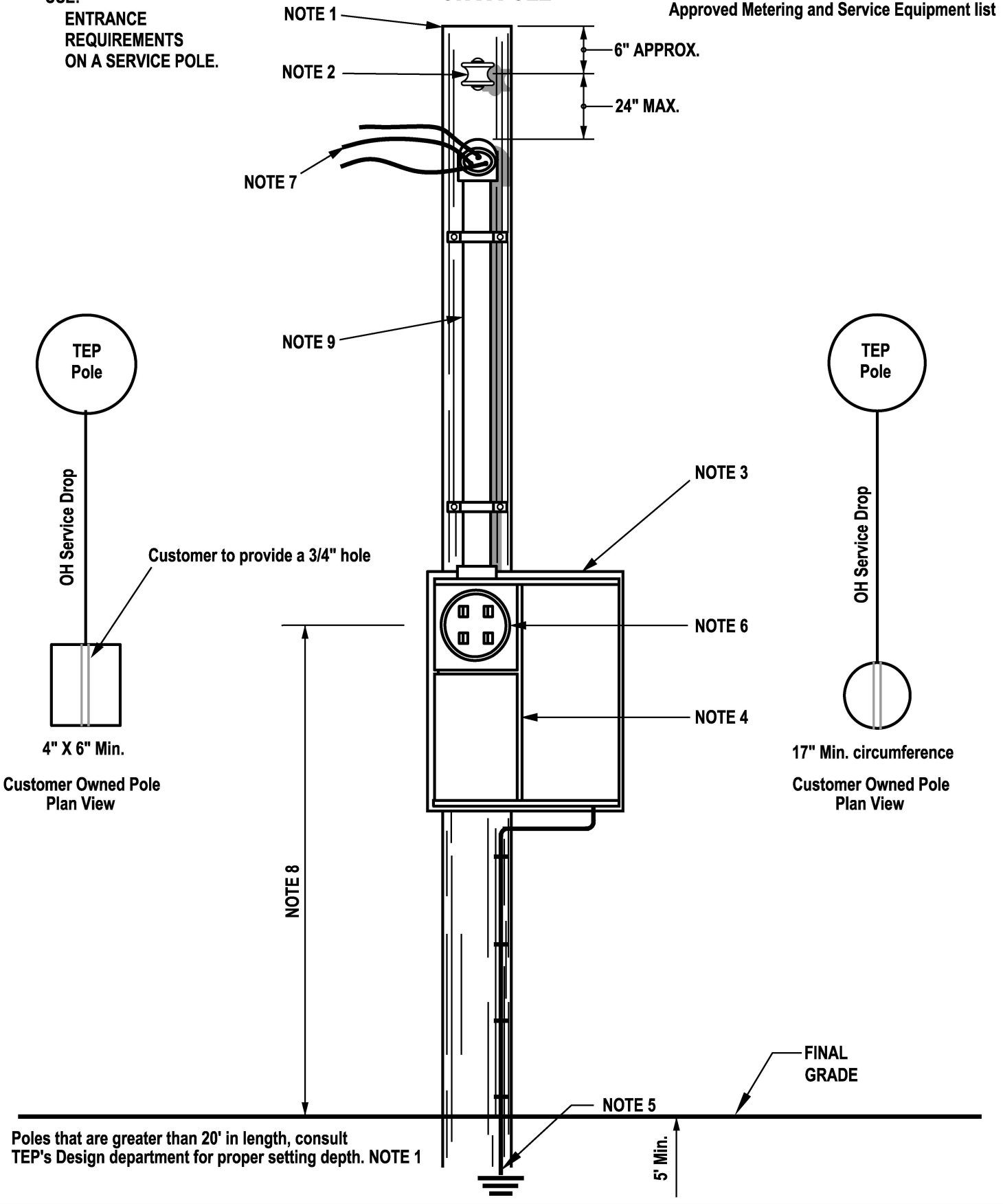

Poles that are greater than 20' in length, consult TEP's Design department for proper setting depth. NOTE 1

Tucson Electric Power / UniSourceEnergy Services SANTA CRUZ COUNTY	INITIATED BY	SC	REVISION NO.	11	SR-307 Pg. 1 of 3
	STANDARDS COMM.	1-69	ESR COMM.	4-10	
			EFFECTIVE DATE	5-10	

SERVICE ENTRANCE
ON A POLE

Use: Entrance Requirements
on a Service Pole

NOTE 1: The service pole shall be a treated wood pole with a minimum circumference of seventeen (17") inches at the top, (Class 6) and length specified by Design, Service Requirements & Service Delivery Department. Setting depth to be a minimum of at least five (5') feet. (A pole to be used for permanent service shall be treated to resist rot and weathering.) The pole shall be tall enough to give the service drop wires proper clearance above final grade as specified in Note 10. For poles extending more than 15 feet above ground, consult TEP's Design, Service Requirements & Service Delivery Department for pole specifications and setting depths.

Note 2: The conduit or cable weatherhead shall be a minimum of one foot below the top of the pole. The customer shall provide a 3/4" hole through the pole, no greater than 24" away from the top of the weatherhead, and no closer than 6" to the top of the pole. The weatherhead and hole is to face in the same direction of TEP/UES pole to be served from. TEP will furnish and install the deadend clevis. For UES, the customer will provide and install the deadend clevis.

Note 3: A meter board 10" X 22" X 3/4", or larger, treated for outdoor application, shall be fastened securely to the pole for mounting meter sockets, switches, and any other devices necessary for adequate metering and protection.

Note 4: The customer will provide a service disconnecting device which meets all requirements of the current National Electric Code. The operation of the device shall be such that the neutral (grounded conductor) is not broken when the device is opened. The operating handle or member shall be capable of being sealed either open or closed.

Note 5: The service disconnect shall be effectively grounded in compliance with the applicable requirements of local governmental codes, or National Electrical Code requirements in the absence of local codes.

Note 6: Meters and instrument transformers will be supplied by TEP or Service Provider. Meter sockets are to be purchased, installed and maintained by the customer per SR-400 Series.

Note 7: Entrance conductors shall extend at least 24" from the conduit or cable weatherhead. The neutral conductor shall be identified. **When grouping with multiple risers the entrance conductors shall extend at least 48" to allow for permanent connections.**

Note 8: All meter sockets shall be mounted between 3'-6" min. and 6'-3" max. from final grade to the center of the meter.

Note 9: The service pole location will be determined by mutual agreement between the customer and TEP's Design, Service Requirements & Service Delivery Department.

Use: Entrance Requirements
on a Service Pole

SERVICE ENTRANCE ON A POLE

NOTES:

10. The point of attachment to the customer's service pole must be sufficiently high to provide the following minimum ground clearances to the TEP's Service drop cable. (0-750V.)

A. Over parking lots, service areas, public streets, alleys or driveways open to the public, or areas reasonably expected to be subject to equestrian activity - 18 feet.

B. Over private residential driveways and spaces or ways accessible to pedestrians only - 15 feet. May be reduced to 12 feet for supply conductors limited to 300V to ground and located more than 25 feet measured in any direction from a swimming pool or diving platform.

11. Temporary service duration is 2 years or less.

USE: 3Ø, 4-WIRE SERVICE
208Y/120V,
240/120V DELTA,
OR 480Y/277V,
600A OR LESS

3Ø UNDERGROUND SERVICE FROM OVERHEAD, 600A

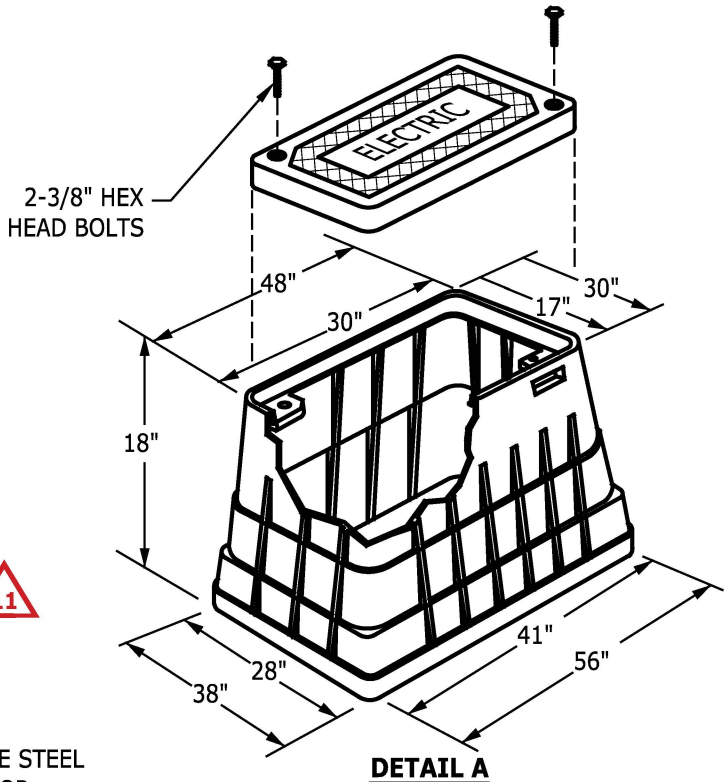

DETAIL A
JUNCTION BOX
(DIMENSIONS ARE APPROXIMATE)

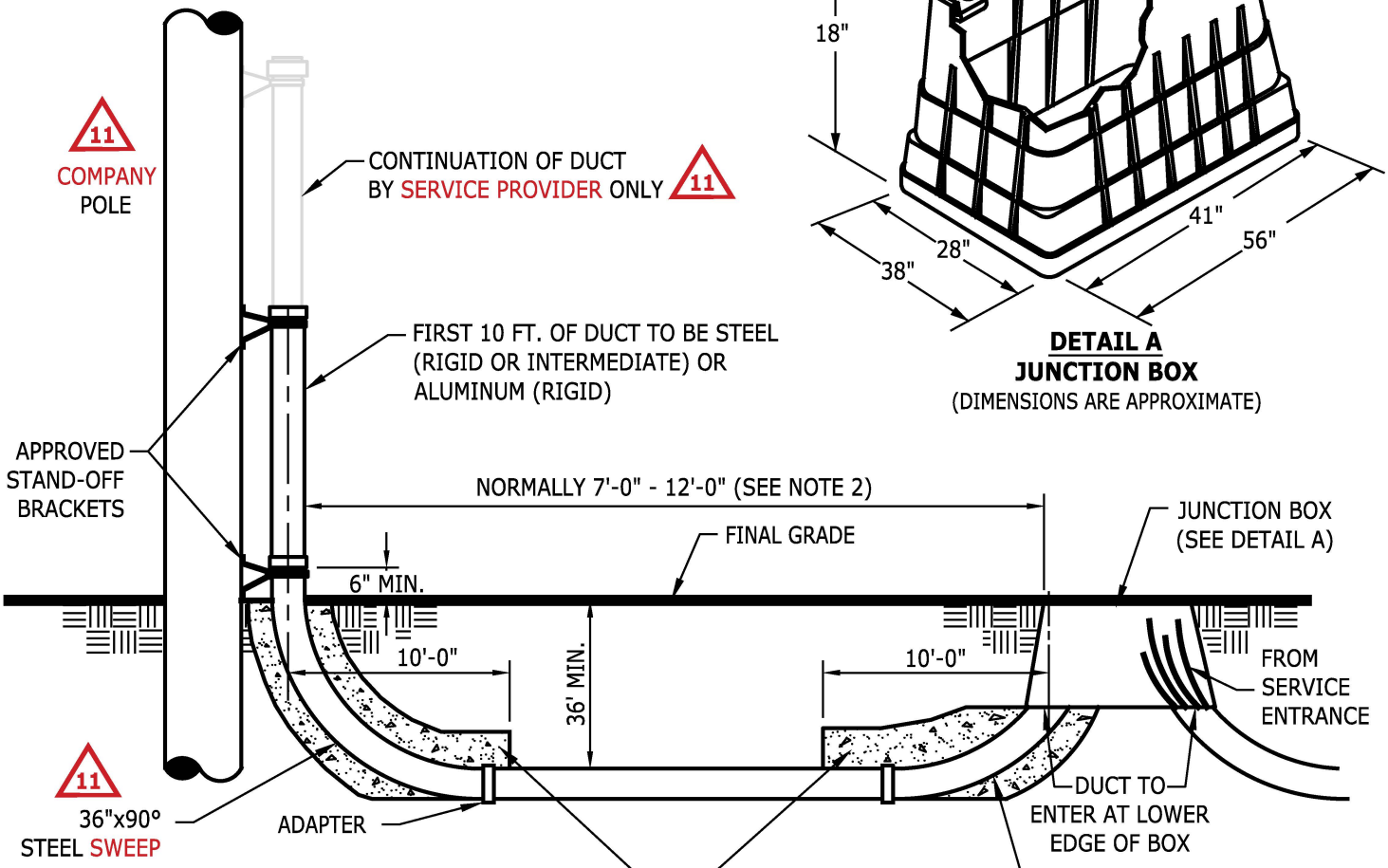

3" MIN. / 5" MAX. CONCRETE ENCASEMENT FOR ALL DUCT SIZES (SEE SR-205). CONCRETE ENCASEMENT IS REQUIRED IF A CONDUIT RUN IS MORE THAN 150 FT. IN LENGTH, OR ANY LENGTH WITH A COMBINATION OF 270° (OR MORE) OF BENDS, NOT TO EXCEED 360°.

THESE REQUIREMENTS APPLY TO COMMERCIAL AND INDUSTRIAL CUSTOMERS SERVED UNDERGROUND FROM AN OVERHEAD SYSTEM WITH THREE-PHASE SERVICE ENTRANCE EQUIPMENT RATED 600A OR LESS AND 480V OR LESS.

THREE-PHASE UNDERGROUND SERVICE FROM OVERHEAD, 600A

Customer Responsibilities

1. Provide and install an approved secondary junction box. The box size to be determined by Design Services. The junction box must include a polymer concrete cover with recessed hex head bolts. Align the junction box so that the ducts terminate at the bottom edges of the ends (the faces having the shorter dimension). The top of the box shall be flush with established final grade. See item #7 for approved manufacturers.
2. Provide and install a duct from the bottom edge of the junction box to the Company pole. Extend the duct up the pole 10 feet above the top of the elbow. The conduit installation shall meet the requirements of SR-205. Concrete encasement is required if a conduit run is more than 150 feet in length, or any length with a combination of 270° (or more) of bends, not to exceed 360°. The vertical sweeps at each end require concrete encasement for a distance of 10 feet from centerline of the conduit run termination.
3. The duct size shall be 4 inches for service entrance ratings of 0-600 Amps. All risers must be secured to pole with standoff brackets (See Note 7 for material).
4. Provide and install service cable (maximum of three conductors per phase and a neutral) from the service entrance to the junction box. Cut cables so that they extend to the opposite end of the junction box to provide length required for assembly of connections by Service Provider. Conductors shall be smaller than 1/0 AWG nor larger than 500kcmil. Secure the lid to the box with the hex head bolts.
5. Identify at the junction box, the neutral conductor(s) (and power leg conductor(s) if service voltage is 240/120V delta), in accordance with National Electrical Code requirements.
6. Identify all conductors with phase tape to insure proper connection. Each neutral conductor from a service lateral is to be identified with an aluminum embossed permanent address tag at the box, 12 inches above the conduits.
7. Material & Approved Manufacturers

   17"x30" Junction Box (20k Rated)
   TEP Stores Number 7-07-5120
   - Armorcast Products Co., Cat. No. 6001640-AS
   - CDR Systems, Cat. No. ECAA173018100
   - Quazite, PE1730BAPG1730CC17
   - Christy Concrete Prod., Cat. No. FL36BOX18
   - New Basis, Cat. No. FCA173018H-0004

   30"x48" Junction Box (20k Rated)
   TEP Stores Number 7-07-5121
   - New Basis., Cat. No. FCA304818T-00042

   4" Standoff Bracket
   - Aluma-Form, Inc., Cat. No. 4-CSO-7/.STK-4T, Lag Screw, 1/2"x4"

8. Rigid Steel, IMC, and Rigid Aluminum conduit must have a protective tape applied. The tape is to be installed starting at 6 inches above final grade down beyond the (HDPE or PVC) coupling joint. Use 10 mil. protection tape in a half lap installation.

Service Provider Responsibilities

1. Specify location for junction box and on which quadrant pole riser is to be attached. Location of the junction box will normally be 7 to 12 feet from pole, but should be in a non-traffic area. If located in a traffic area, protective posts must be installed per SR-230.
2. Provide and install continuation of duct on Company pole and ground the metal riser.
3. Provide and install cable in the duct from transformer to junction box.
4. Provide and install connectors at junction box. The load terminals of these connectors shall be the point of delivery for this installation.
5. Maintain the junction box after the service is connected to the Company distribution system.

Use: 1Ø, 3-wire service
240/120 V
400 A or less.

1Ø UNDERGROUND SERVICE FROM OVERHEAD, 0 - 400 A

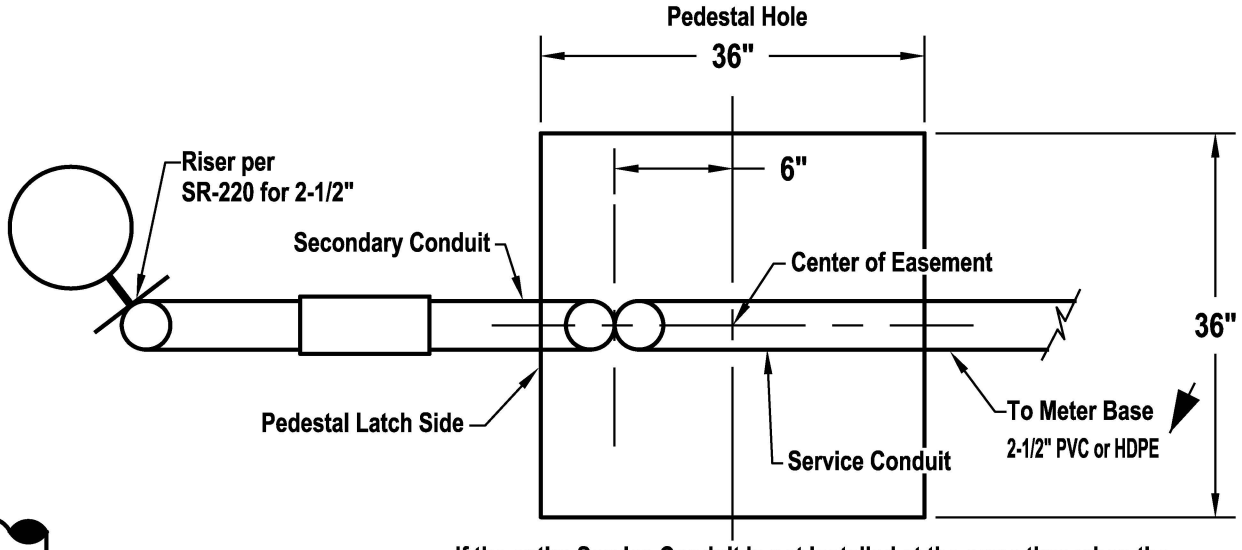

If the entire Service Conduit is not installed at the same time when the pedestal is, then a 36" x 90º sweep and 5' straight stick (stub out) of schedule 40 PVC will be installed. The stub out will contain the pull rope for the entire run, plus 10' excess for each end. Duct plugs shall cover all conduits.

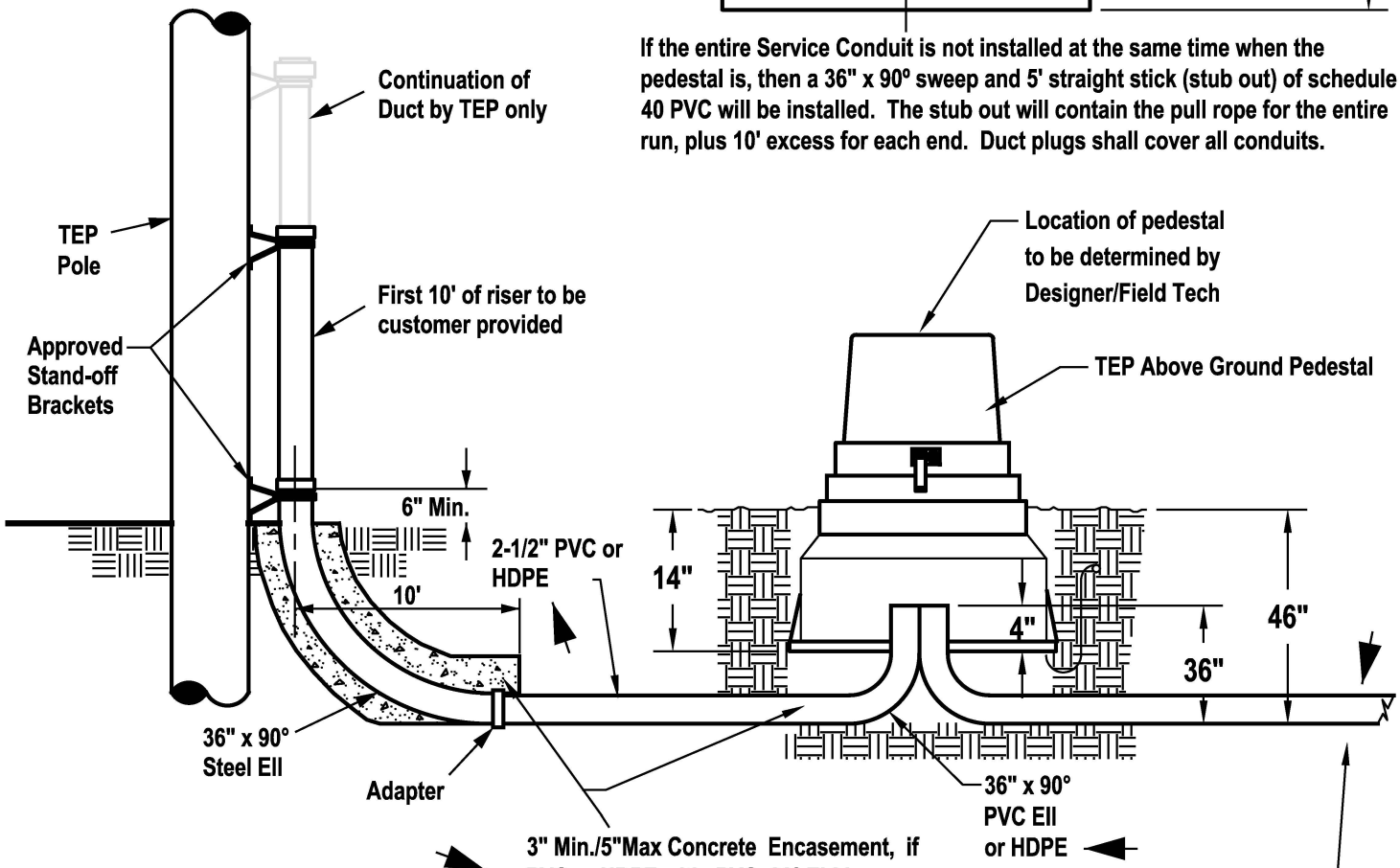

3" Min./5"Max Concrete Encasement, if PVC or HDPE with PVC 90° ELL's, conduit run exceeds 150' or any length with a combination of 270° (or more) of bends, not to exceed 360°.

No Concrete is required with a Continuous Wave-Rib installation

Tucson Electric Power / UniSourceEnergy Services SANTA CRUZ COUNTY	INITIATED BY	GC	REVISION NO.	2	SR-308-A Pg. 1 of 2
	STANDARDS COMM.	6-05	ESR COMM.	3-07	
			EFFECTIVE DATE	5-07	

1Ø UNDERGROUND SERVICE FROM OVERHEAD, 0 - 400 A

Customer Responsibilities

1. From the specified TEP pole, provide and install a 36"x 90° steel ell and the first 10' length of steel riser up the pole, then from the riser extend a 2.5" duct system ending with a 4" stub above the sub-grade; within the pedestal hole. If the entire Service Conduit is not installed at the same time when the Secondary conduit and pedestal is, then a 36" x 90° sweep and 5' straight stick (stub out) of schedule 40 PVC will be installed. The stub out will contain the pull rope for the entire run, plus 10' excess for each end. Duct plugs shall cover all conduits. The duct installation shall meet the requirements of SR-205. For Concrete Encasement requirements: Where the duct run exceeds 150' in length between the riser pole and the secondary pedestal, or any length with a combination of 270°, bends not to exceed 360°. This encasement will be required on the vertical sweeps only for the length of 10'.

Rigid Steel, IMC, and Rigid Aluminum conduit must have a protective tape applied. The tape is to be installed starting 6" above final grade down beyond the (Shur-Lock II or PVC) coupling joint. Use 10 mil. protection tape in a half lap installation.

2. The duct size shall be 2-1/2" for service entrance ratings of 0-400 Amps. All risers must be secured to pole with standoff brackets (See Note 3 for material).

3. Approved Material

2.5" Standoff Bracket - Aluma-Form, Inc., Cat. No. 4-CSO-7/.STK-2.5T
Lag Screw, 1/2" X 4" or Riv- Nuts.
Riv- Nut Installation tool - 131638, Riv-Nut - AB66900, see SR-220

4. TEP will supply the customer with the above ground pedestal which the customer is to install. Please give TEP a 1 week notice and specify a contact name, phone number, and staging area. It's the customers' responsibility for the care of this material. The customer must sign for the delivered material. Any lost or damage material will be the responsibility of the customer to replace with approved TEP material.

5. Any existing CIC Secondary or Service cables that are required to be relocated to the new pedestal will require the installation of the previously specified stub out. TEP will advise the customer on the direction of placement.

TEP Responsibilities

1. Specify location for the pedestal, and what quadrant the pole riser is to be attached. Location of the junction box will normally be 7' to 12' from pole, or as specified by Designer/F.Tech area. If located in a traffic area, protective posts must be installed per SR-230.

2. Provide and install continuation of duct on TEP pole and ground the metal riser.

3. Provide and install cable in the duct from the pole to the junction box.

4. Provide the pedestal. Terminate the secondary and service conductors.

5. Maintain the pedestal after the service is connected to TEP's distribution system.

USE: 3Ø, 4-WIRE SERVICE
208Y/120V,
OR 480Y/277V, 600A

3Ø UNDERGROUND SERVICE FROM PAD MOUNTED TRANSFORMER, 600A

(APPLICABLE FOR CROSSING PUBLIC RIGHT-OF-WAY)

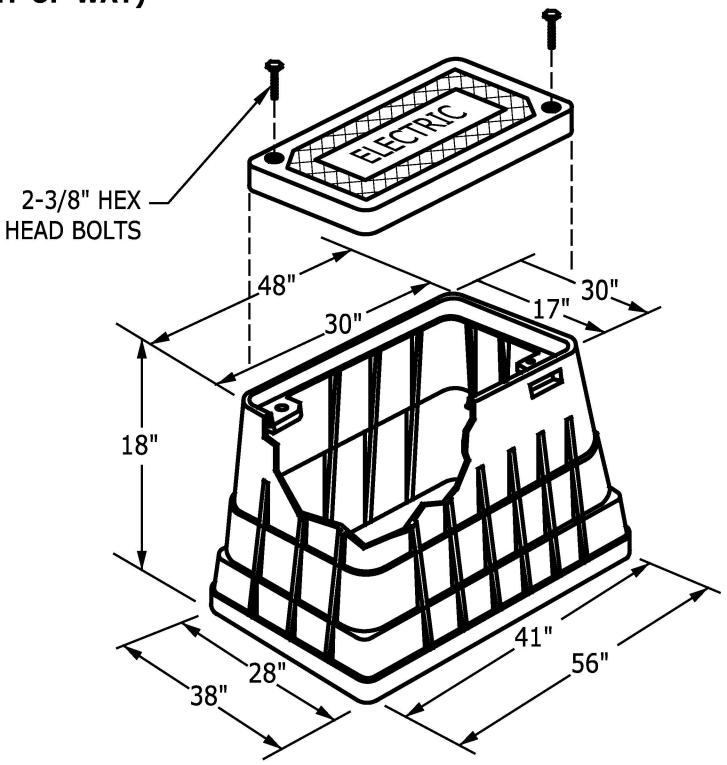

DETAIL A
JUNCTION BOX
(DIMENSIONS ARE APPROXIMATE)

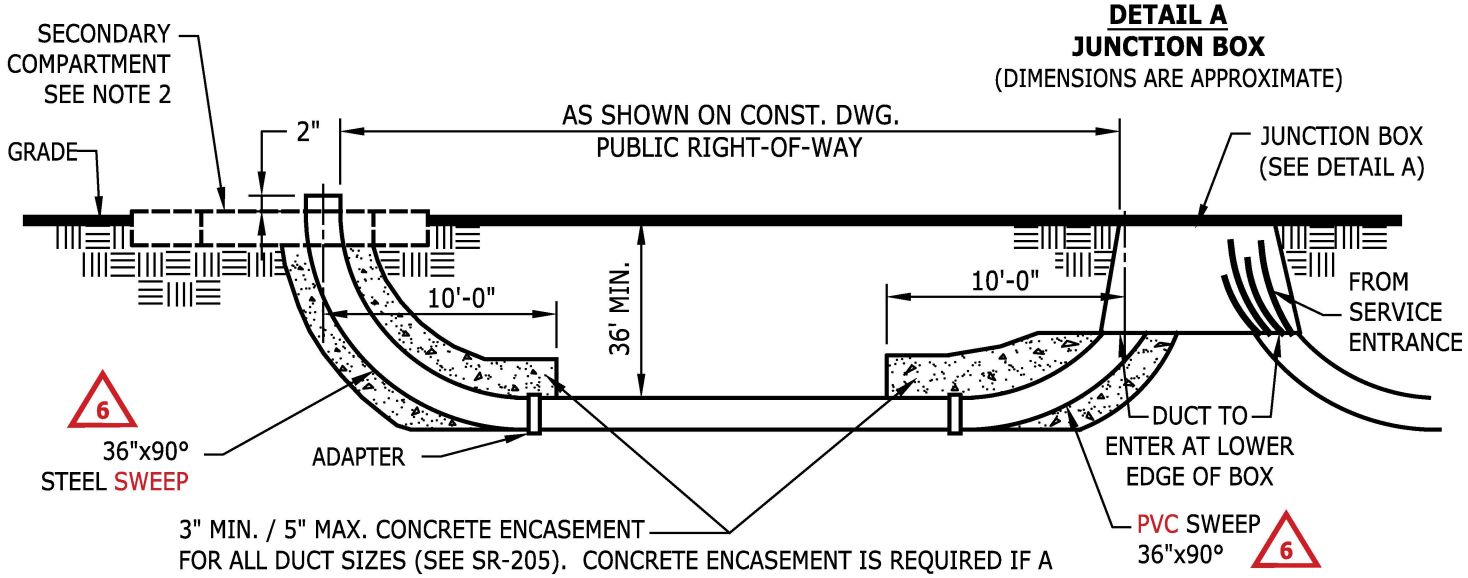

3" MIN. / 5" MAX. CONCRETE ENCASEMENT FOR ALL DUCT SIZES (SEE SR-205). CONCRETE ENCASEMENT IS REQUIRED IF A CONDUIT RUN IS MORE THAN 150' IN LENGTH, OR ANY LENGTH WITH A COMBINATION OF 270° (OR MORE) OF BENDS, NOT TO EXCEED 360°.

THESE REQUIREMENTS APPLY TO COMMERCIAL AND INDUSTRIAL CUSTOMERS WHO WILL BE SERVED UNDERGROUND FROM AN UNDERGROUND SYSTEM WITH THREE-PHASE SERVICE ENTRANCE EQUIPMENT RATED 600A OR LESS AND 480V OR LESS LOCATED SUCH THAT THE CUSTOMER'S SERVICE CONDUCTORS MUST CROSS PUBLIC RIGHT-OF-WAY.

THREE-PHASE UNDERGROUND SERVICE
FROM PAD-MOUNTED TRANSFORMER, 600A

Customer Responsibilities

1. Provide and install an approved secondary junction box. The box size to be determined by Design Services. The junction box must include a polymer concrete cover with recessed hex head bolts. Align the junction box so that the ducts terminate at the bottom edges of the ends (the faces having the shorter dimension). The top of the box shall be flush with established final grade. See item #6 for approved manufacturers.

2. Provide and install a 4 inch duct from the bottom edge of the junction box to the Company transformer. Extend the duct into the secondary compartment of the transformer pad as depicted in SR-233, Note 2. For access to pad-mounted equipment refer to Section 100.

3. Provide and install service cable (maximum of three conductors per phase) from the service entrance to the junction box. Cut cables so that they extend to the opposite end of the junction box to provide length required for by Service Provider assembly of connections. Conductors shall not be smaller than 1/0 AWG nor larger than 500kcmil. Secure the lid to the box with hex head bolts.

4. Identify at the junction box, the neutral conductor(s) in accordance with National Electrical Code requirements.

5. Identify all conductors with phase tape to insure proper connection. Each neutral conductor from a service lateral is to be identified with an aluminum embossed permanent address tag at the box, 12 inches above the conduits.

6. Material & Approved Manufacturers

17"x30" Junction Box (20k Rated)
TEP Stores Number 7-07-5120
- Armorcast Products Co., Cat. No. 6001640-AS
- Christy Concrete Products - Cat. No.FL36BOX18
- CDR Systems - Cat. No. PA30-1730-18S
- Electrimold Inc. - Cat. No.ECAA-173018-100
- New Basis - Cat. No. FMA173018TN20001P212N00000
- Quazite - Cat. No. PT1730BA (Box), PG1730CA00 (Cover)

30"x48" Junction Box (20k Rated)
TEP Stores Number 7-07-5121
- New Basis., Cat. No. FCA304818T-00042
- Armorcast Products Co. - Cat. No. A6001550AX18

Service Provider Responsibilities

1. Specify location for junction box. Location of the junction box should be in a non-traffic area. If located in a traffic area, protective posts must be installed per SR-230.

2. Provide and install cable in the duct from transformer to junction box.

3. Provide and install connectors at junction box. The load terminals of these connectors shall be the point of delivery for this installation.

4. Maintain the junction box after the service is connected to Company distribution system.

Use: Entrance requirements on a building.

SERVICE ENTRANCE
Underground

Note:
TEP designs exclusively with a customer provided and installed total conduit system.

See SR-304, Page 1 and 2 for Meter Location

RISER NOTE:

Rigid Steel or IMC conduit must have a protective tape applied. The tape is to be installed starting 6" above final grade down beyond the (HDPE / Shur-Lock II or PVC) coupling joint. Use 10 mil. protection tape in a half lap installation.

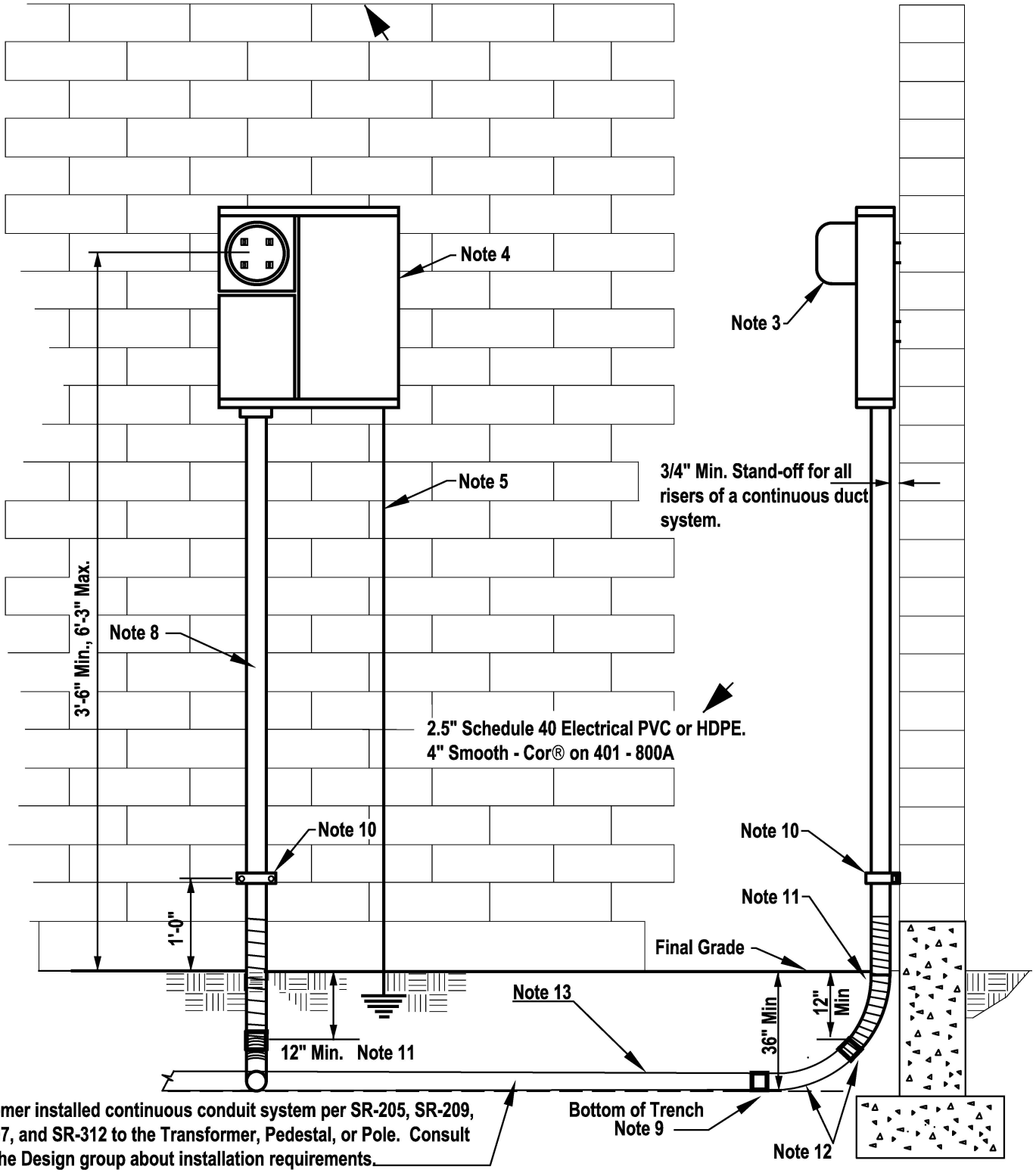

Tucson Electric Power / UniSourceEnergy Services SANTA CRUZ COUNTY	INITIATED BY	SC	REVISION NO.	19	SR-310 Pg. 1 of 4
	STANDARDS COMM.	11-68	ESR COMM.	3-07	
			EFFECTIVE DATE	5-07	

SERVICE ENTRANCE
Underground

Use: Entrance requirements on stub poles supporting panel.

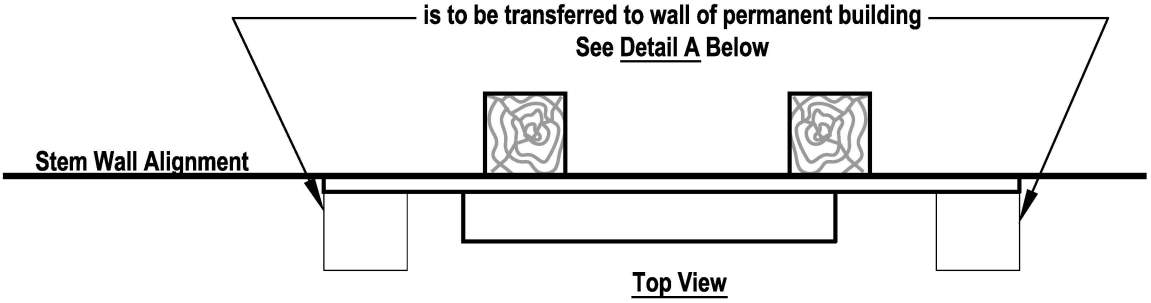

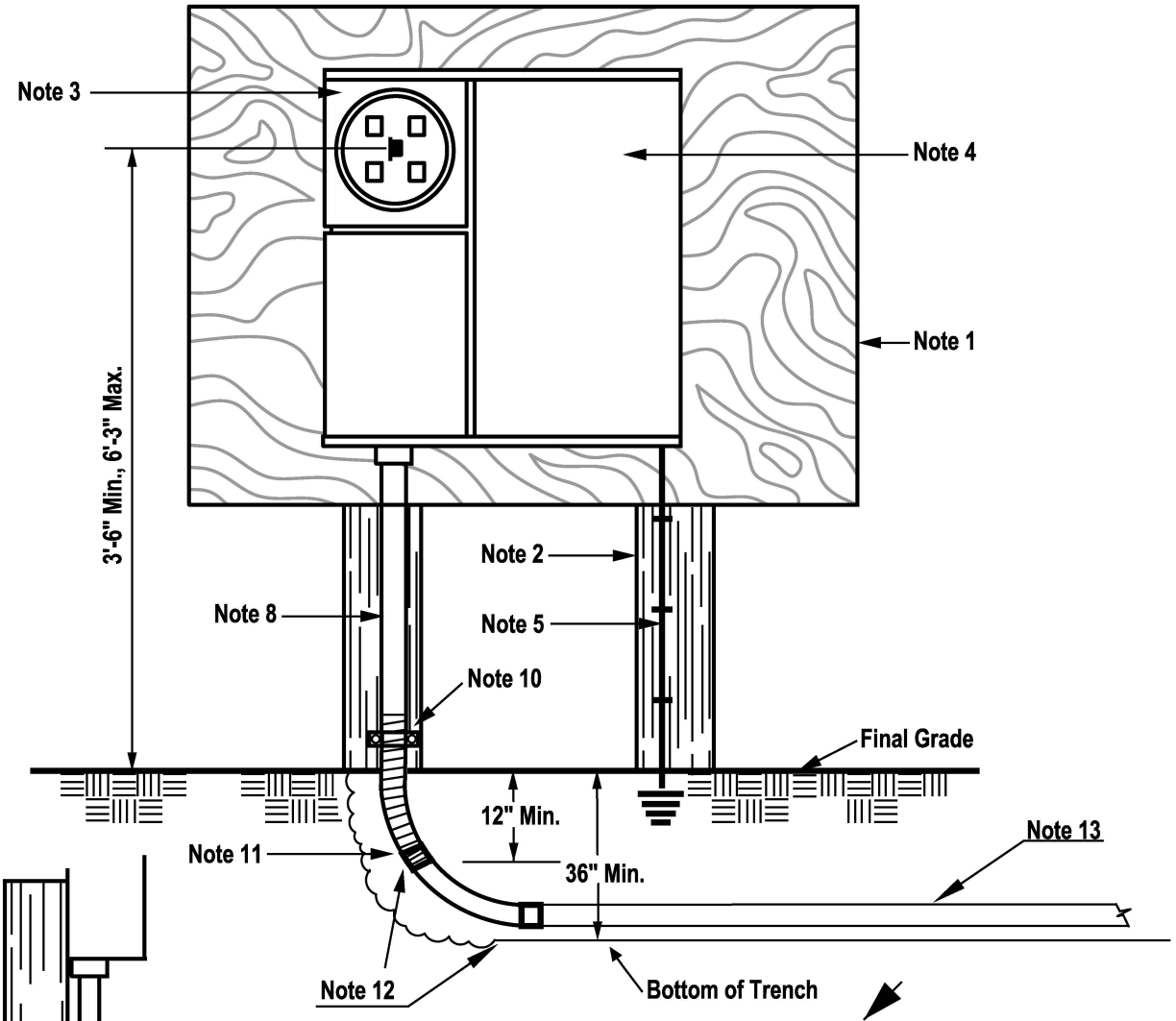

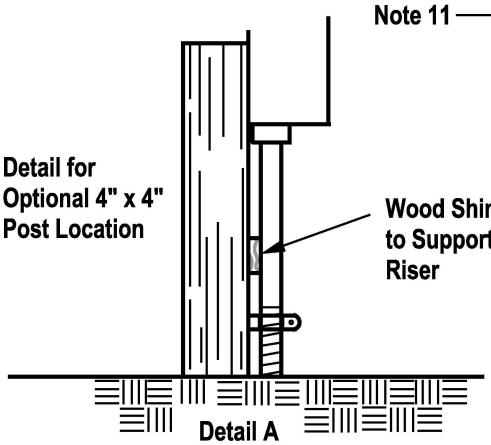

2.5" Schedule 40 Electrical PVC or HDPE.
4" Smooth - Cor® on 401 - 800A

Customer installed continuous conduit system per SR-205, SR-209, SR-207, and SR-312 to the Transformer, Pedestal, or Pole. Consult with the Design group about installation requirements.

USE: Entrance requirements on a building

SERVICE ENTRANCE UNDERGROUND

1. If utilized, a meter board 10" x 22" x 3/4" or larger, treated for outdoor application, shall be fastened securely to the building wall, or other support, for mounting meter sockets, switches, and any other devices necessary for adequate metering and protection. Other mounting arrangements subject to the Company's approval.

2. Where meter socket and switches are mounted on a meter board supported by two stub poles, such poles shall be a nominal 4" x 4", and treated to resist rot and weathering. The poles shall be set sufficiently deep to provide rigid support for installation of the meter and operation of the switch.

3. Meter and instrument transformers will be furnished by TEP or Service Provider. Meter sockets are to be purchased and installed by the customer per SR-400 Series.

4. The customer shall provide a service disconnecting device which meets all requirements of the current National Electrical Code. The operation of the device shall be such that the neutral (grounded conductor) is not broken when the device is opened. The operating handle or member shall be capable of being sealed either open or closed.

5. The service disconnect switch shall be effectively grounded in compliance with the applicable requirements of local governmental inspection codes, or National Electrical Code requirements in the absence of local codes.

6. All meter sockets shall be mounted between 3'-6" minimum and 6'-3" maximum from final grade to the center of the meter.

7. The service disconnect switch described in Note 4 above may be mounted beside and separate from the meter socket.

8. The service run from the meter socket down the building wall or mounting board shall be in rigid or intermediate steel conduit (2 1/2" for 0 - 400A, and 4" for 401 - 800A) with a 45° or 90° sweep into the service trench. The steel portion of the riser shall be 1' below the final grade. A threaded connection is required at both ends of the riser. All installations over 400A may require 2 - 4" diameter conduits (Smooth-Cor). The customer is required to install a protective tape to the riser starting 6" above the final grade, then down beyond the (HDPE or PVC) coupling joint. The tape shall overlap the coupling joint by 2".

Single-phase service to individual residential or commercial customers, (SR-310, Pg.1) will normally be furnished using TEP's underground cable. The customer will be required to furnish and install a continuous conduit system sized for the service entrance amperage. When total service switch capacity on existing buildings is increased beyond the capability of existing service cable sized to handle the initial switch capacity, the customer will be responsible for the cost of any trenching and duct installation which may be required to enable TEP to adequately serve the increased load.

USE: Entrance requirements on a building.

SERVICE ENTRANCE UNDERGROUND

(8. continued) Single-phase service cable to apartment buildings and townhouse complexes shall be sized based on the estimated demand load. If this demand is expected to exceed the ampacity of a 2 1/2" conduit , then a 4" continuous conduit system (or 2 - 4") must be installed by the customer. For riser requirements at a pole, see SR-308-A / SR-220.

All continuous conduit runs regardless of size, are to have a 45º or 90° sweep with a 36" radius at service riser, and a 90° sweep with a 36" radius at pad-mount transformer, pedestal, or pole riser. The total of all deflections within the conduit run are not to exceed 270° (See Note 14 for exceptions). Refer to SR-205 for conduit requirements.

9. The service trench shall be per the TEP Service Requirement SR-312. Random lay with other utilities is acceptable with the exception of sewer. Water and gas lines shall maintain a 1' separation (horizontal or vertical / horizontal) other than directly above the electric facility (see SR-312 pg. 1). Other utilities are not permitted to pass underneath any TEP equipment.

10. Riser to be plumb and securely fastened to the wall or pole in such manner as to not allow movement of the riser when subjected to stresses which may be applied when installing or removing electric service conductor. Riser shall be anchored to a stud for frame stucco construction. Contact the Design Department if building structure is not similar to SR-310, Page 1.

11. Align centerline of riser with the centerline of service trench. Do not aim end of riser into side of service trench. For installations using 2-1/2" conduit with 45° X 36" sweep, position the lower end of riser 12" below the final grade then transition to a Schedule 40 PVC 45° X 36"sweep and coupler or HDPE conduit with Shur - Lock II connector.

12. Trench depth to be 36" when installing a continuous duct system. The sweep is to be a 36" radius X 45° or 90° sweep.

13. 2 1/2" DB-120 PVC electrical conduit may be used in straight runs in service installations when the meter location is on the same side as the utility source (see SR-304 pg. 2. The sweeps and connectors shall be Schedule 40 PVC, no greater than 270º of bends within the conduit run. The maximum service length is 250'.

14. When cross-trenching (opposite quadrant See SR-304 pg. 2 of 2), 360º of deflections are permitted within a service run. The underground service length is to be 100' or less, and using Schedule 40 PVC, Wave Rib or Dura Line conduit (No DB-120 PVC allowed). The meter will be located in front of any wall or fence.

15. Underground supply cable should not be installed within 5 feet horizontally of an above ground or in-ground swimming pool or its auxiliary equipment. Swimming pools will not be installed over electrical utility cables.

TRENCHING, SERVICE
(SINGLE-PHASE)

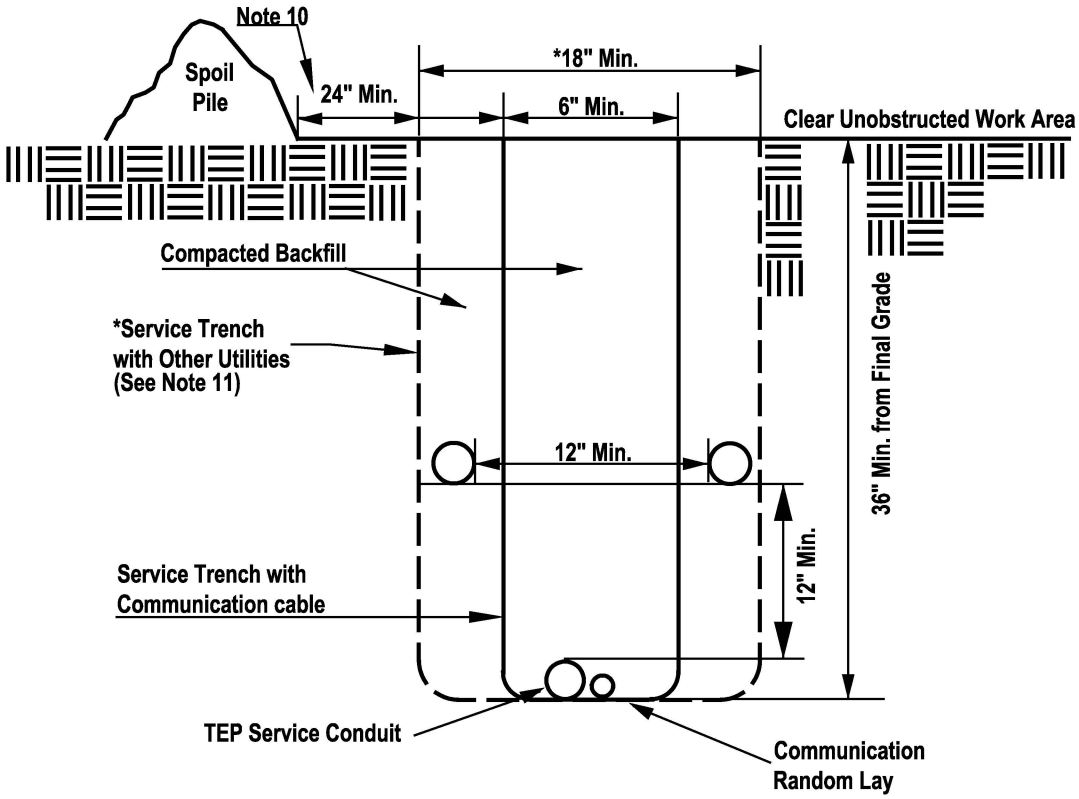

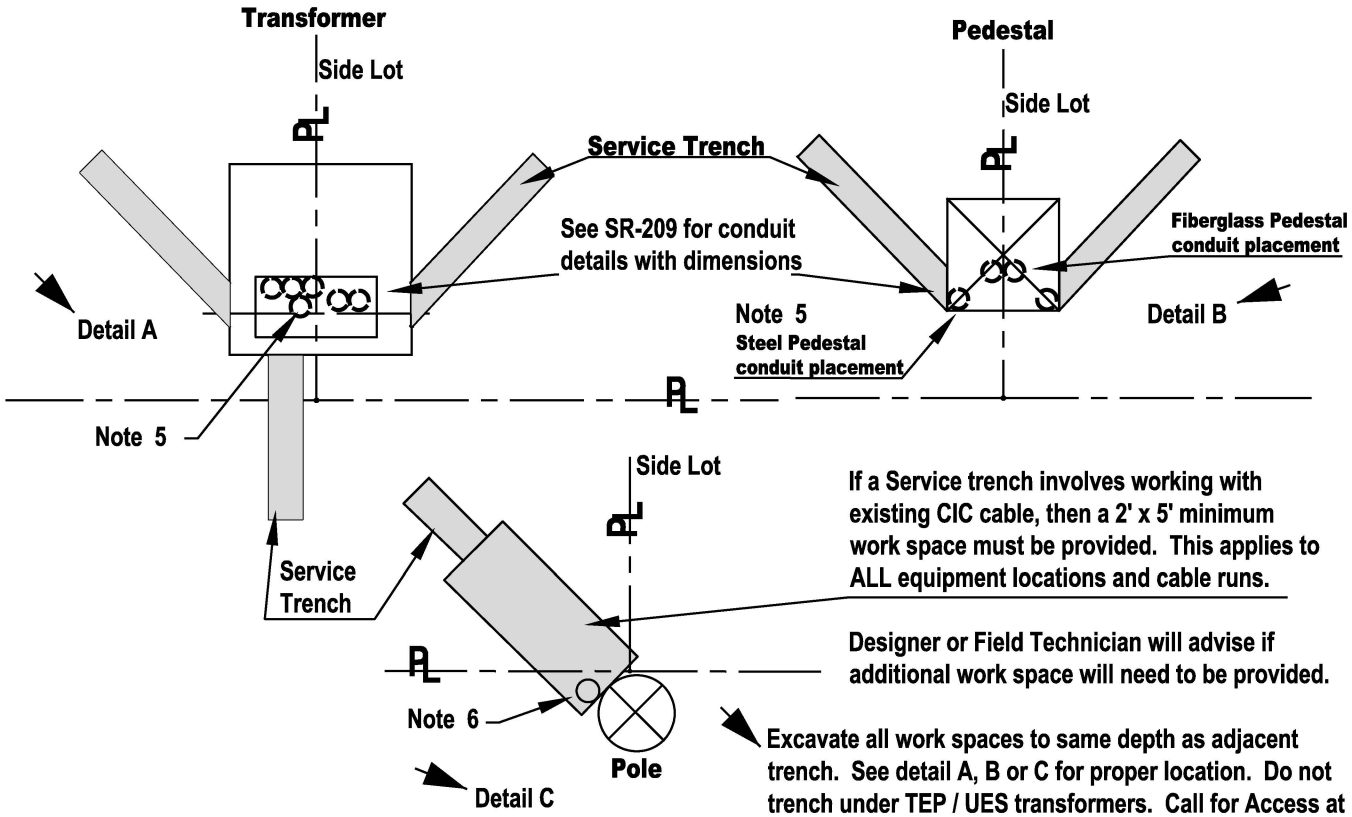

If a Service trench involves working with existing CIC cable, then a 2' x 5' minimum work space must be provided. This applies to ALL equipment locations and cable runs.

Designer or Field Technician will advise if additional work space will need to be provided.

Excavate all work spaces to same depth as adjacent trench. See detail A, B or C for proper location. Do not trench under TEP / UES transformers. Call for Access at 918-8300 (761-7952 UES) for conduit placement into equipment.

Tucson Electric Power / UniSourceEnergy Services SANTA CRUZ COUNTY	INITIATED BY	SC	REVISION NO.	14	SR-312 Pg. 1 of 2
	STANDARDS COMM.	8-76	ESR COMM.	3-07	
			EFFECTIVE DATE	4-07	

TRENCHING, SERVICE
(SINGLE-PHASE)

NOTES:

1. For location of existing buried electric facilities, call Blue Stake 1-800-782-5348. Permit number for excavation within the R.O.W. will be provided to TEP prior to starting excavation.

2. Any change in location of work space or trench must be approved by the Design Department.

3. Call TEP @ 918-8300 or UES @ 761-7972 to schedule an access appointment when needing to install a conduit sweep into existing equipment in order to complete the service conduit installation. Please note that a 5 day advance scheduling notice is required.

4. The Service trench recommended width is to be 6" minimum with communication cable and 18" minimum with other utilities. The minimum depth is 36" with a 12.6' (PVC) or 4' (Wave-Rib or Dura · Line) minimum horizontal radius.

5. When installing a conduit into existing underground equipment, it must be field located in the transformer pad opening and must have a 90° sweep with a 36" radius. The trench depth is to be 36" minimum, and horizontal radius shall be 12'-6". All ducts to be 1" above the existing transformer pad or 5" above final grade where the transformer pad will be installed. The trench width is to be 12" minimum. If installing the duct into energized equipment, an access crew will be required.

6. See SR-220 if a 2.5" or 4" riser is required at a pole.

7. In all 10' strip easements, transformers and pedestals are to be located within the 4' of the easement adjacent to property.

8. Where trench cannot be left open, see SR-210 for Requirements for Installation of Sleeve(s).

9. The service trench must be backfilled completely prior to the service cable installation by TEP.

10. The excavation spoil pile must be placed a minimum 2' away from the edge of the trench. This 2' area shall be level and free of debris to permit safe footing during inspection.

11. A joint Service trench with other utilities is acceptable with the exception of sewer. Water and gas lines shall maintain a 1' separation (horizontal or vertical / horizontal) other than directly above the electric facility (see SR-312 pg. 1). Other utilities are not permitted to pass underneath any TEP equipment.

12. If only a service sweep / stub is being installed into TEP/ UES equipment, it shall be per SR-209 & SR-218. An access crew appointment is required for the conduit sweep installation. (TEP 918-8300 and UES 761-7972)

USE: 1Ø temporary service from an underground source, 200 A max.

SERVICE ENTRANCE
Temporary, Underground

Refer to SR-452 for the complete Approved Metering and Service Equipment list

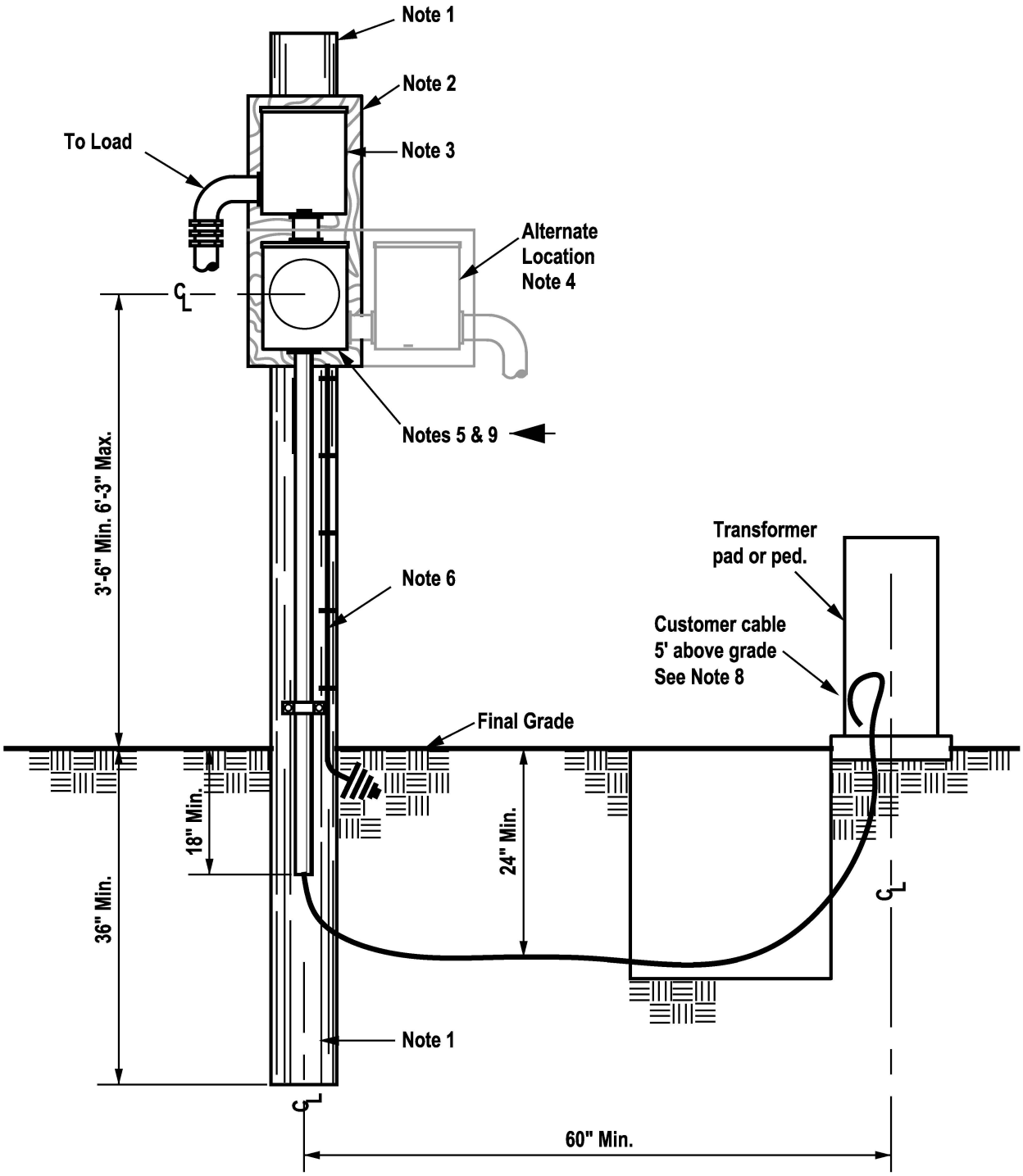

Tucson Electric Power / UniSourceEnergy Services SANTA CRUZ COUNTY	INITIATED BY	SC	REVISION NO.	11	SR-314 Pg. 1 of 2
	STANDARDS COMM.	3-75	ESR COMM.	11-12	
			EFFECTIVE DATE	12-12	

USE: 1Ø temporary service from an underground source, 200 A max.

SERVICE ENTRANCE
Temporary, Underground

NOTES:

1. A service pole shall be nominal 4" x 4" or 6" diameter. The pole shall be set 3' deep.

2. A meter board 10" x 22" x 3/4" or larger, treated for outdoor application, shall be fastened securely to the pole for mounting meter sockets, switches, and any other devices necessary for adequate metering and protection.

3. The customer shall provide a service disconnecting device which meets all requirements of the current National Electrical Code. The operation of the device shall be such that the neutral (grounded conductor) is not broken when the device is opened. The operating handle or member shall be capable of being sealed either open or closed.

4. The service disconnect switch described in Note 3 above may be mounted either above or beside the meter socket as shown on Page 1.

5. Meters will be supplied by TEP or Service Provider. Meter sockets are to be furnished, installed and maintained by the customer per SR-400 Series. For 120/208V and 277/480V services, refer to SR-410 page 2 regarding five terminal sockets.

6. The service disconnect switch shall be effectively grounded in compliance with the applicable requirements of local governmental codes, or National Electrical Code requirements in the absence of local codes.

7. The service trench shall comply with local governmental codes, or National Electrical Code requirements in the absence of local codes. All trenching shall be backfilled by the customer.

8. The customer is to provide and install the temporary service cable under the supervision of a TEP/UES access crew. In some circumstances, an outage may be required. The conductor size range shall be #6 - 350kcmil in order to connect to TEP/UES underground equipment. The neutral conductor is to be identified with white tape at both ends for 3 inches in length. In addition, an address tag (Ex. Dymo aluminum embossing tape) including the word TEMP, shall be attached to the neutral conductor at the transformer or pedestal location. Direct burial conductors are allowed only upon approval by the local governing agency. The service cable shall be in compliance with the applicable requirements of local governmental codes, or National Electrical Code in the absence of local codes.

9. Panels must be identified in accordance with SR-405 'METER SOCKET AND METER SWITCH IDENTIFICATION.'

10. Temporary service duration is 2 years or less.

400 SECTION
METERING INSTALLATION

TITLE	SR-No.
General Requirements (pg. 1-6) Definitions (pg. 7-8) Requirements for Residential Socket Interiors (pg. 9) Meter Enclosures and Clear Working Space (pg. 10)	405
Residential or Commercial (Restricted) Service 0-100A, 3W, 1Ø Overhead and 0-30A, 2W, 1Ø Overhead or Underground (pg. 1) Residential Overhead Sevice, 101-200A, 3W, 1Ø (pg. 2) Residential Underground Sevice, 0-200A, 3W, 1Ø (pg. 3) Residential Sevice, 0-200A, 3W, 1Ø Combination Meter Socket and Distribution Section (pg. 4) Meter Post - Underground Service to Mobile Home (pg. 5-6)	408
Non-residential Service Pedestal (Including Traffic Signals) 0-200A/0-600V	409
Commercial Service, 0-200A, 3W or 4W, 1Ø or 3Ø	410
Residential or Commercial Service, 201-400A, 3W, 1Ø	412
Socket Requirements , 1Ø or 3Ø w/Instrument Transformers	414
Residential or Commercial Service, Multi-Metering Installations	418
Metering Protective Cabinets (See Note 4 for Totalized Metering)	420
Current Transformer Installations in Cabinet	422
Meter Socket and Conduit Installation Detail for Primary Metered Service	423
Remote Meter Cabinet for Primary Metered Service, 201-800A	424
Terminating Box or Section	425
Combination Terminating Box and Main Disconnect	426
Current Transformer Installations in Switchgear	430
Metering Remote	431
Low Profile Switchboards	432
CT Compartment, 401-800A, 1Ø	433
CT Compartment, 201-1000A, 3Ø	434
CT Compartment, 1001-3000A, 3Ø	435
CT Compartment, 3001-4000A, 3Ø	436
Enclosed Meter Panel in Raintight Switchgear	437
Switchboard Meter Panels	438
Removable Bus Links and CT Supports	439
Primary Metering Overhead and Underground	451
Approved Metering and Service Equipment	452
~~Grounding and Bonding~~ (MOVED TO SECTION 600)	~~453~~ ◄

METERING INSTALLATIONS
(General Requirements)

1. METER SOCKETS

Meter sockets are supplied and installed by the customer or an electrical contractor. The meter socket shall be mounted so the socket jaws are in true horizontal and vertical planes and will support the meter without tilt in any direction.

Meter sockets shall comply with applicable TEP Service Requirements, per SR-400 series and will be bonded per code.

Self-contained socket ratings:

Residential - All sockets shall have a maximum ampere rating not less than the ampacity of the main service switch. (Maximum ampere rating of socket being 125 % of continuous duty rating.)

Commercial - All sockets shall have a continuous duty ampere rating not less than the ampacity of the main service switch.

2. METER SWITCH

For each and every meter, the customer or his contractor shall furnish and install a switch or other "approved disconnecting means" which shall control all of and only the energy registered by that meter. **Service will not be rendered until switch is installed.** The meter switch or other approved disconnecting device must have provisions for sealing it in the OFF position with a padlock seal. This may be accomplished by sealing the handle or breaker in the OFF position or by placing the handle or breaker in the OFF position and sealing the cover of the meter switch. In the latter case, each meter switch must be individually covered. The meter switch shall be bonded per code. **Meter switch panel designs that circumvent the locking mechanism of the door or switch, by means of removing the panel cover are not approved for installation.** This requirement applies to all switchboards, stand-alone, and switchgear installations.

3. METER SWITCH LOCATION WITH RESPECT TO METER

Every meter switch installed on a service of less than 600 volts shall be on the load side of the meter or metering equipment.

For residential service installations, the switch must be located outside in the immediate vicinity of the meter socket and accessible from the same working area as the meter socket.

For commercial installations, the switch may be located in an equipment room or a meter room as described on Page 7 for equipment room and pg. 8 for meter room definitions. However, if the switch is installed outside, it must be located in the immediate vicinity of the meter socket, the same as for residential services.

METERING INSTALLATIONS
(General Requirements)

4. MAXIMUM AND MINIMUM SOCKET HEIGHTS

Maximum height to center of socket is six feet, three inches. Minimum height to center of socket is three feet, six inches.

When a meter room is provided, the minimum height shall be three feet, except for multi-meter packs for which the minimum height is permitted to be two feet, six inches.

5. METER SOCKET AND METER SWITCH IDENTIFICATION

The identfication of residential, apartments, commercial service entrance shall have the complete street address of premises where new service is required, shall be plainly displayed. The address is to be placed on the front of the building and legibly on the service entrance. **Permanent identification shall be made with metal tags with raised or etched letters and numbers which will maintain there identity even after being painted. The tags shall be attached to service entrance equipment with rivets or screws.**

For apartment buildings and commercial buildings, TEP will not render service until all switches, meter sockets and individual apartments are permanently identified and the wiring from the multi-meter pack to the interior distribution panel is installed and terminated.

When all of the meters in a multi-meter pack are scheduled to be set, TEP's Meter Department will require the assistance of the customer, customer's agent or Service Provider prior to the setting of meters to verify that each meter socket is for the unit served through the socket.

6. METER ROOMS

Meters and metering equipment may be grouped in an accessible meter room. TEP must have access to meter rooms to facilitate reading and testing meters. (See Meter Room defined SR-405, Page 8.)

7. SEALING OF TERMINATING PULL BOXES, RACEWAYS, ETC.

All terminating pull boxes, raceways, etc., installed on the line side of meter sockets shall have provisions for sealing with a padlock and/or wire seal.

8. RING SEALS

TEP or Service Provider will seal all meter rings and devices mentioned in Requirement 7. The seal is a bond of mutual protection for TEP, Service Provider and the customer. It may not be broken by anyone except persons authorized to do so by TEP or Service Provider. If it becomes necessary for an electrician to access an enclosure which has been sealed by TEP, approval must be obtained from TEP as stated in the "Power Outage Requests," Page 1.25. If it becomes necessary for an electrician to access enclosure which has been sealed by a Service Provider, approval must be obtained by Service Provider. (Service Provider Seals are orange with company identifier).

9. METER AND/OR INSTRUMENT TRANSFORMER CABINET LOCATIONS

Meter equipment shall be installed on an exterior wall and will be accessible for reading and testing without entering the building. With approval of Design, Service Requirements & Service Delivery Dept. and Metering Department, meters and metering equipment may be grouped in an accessible meter room. (See Requirement 6.)

10. PROHIBITED METER AND/OR INSTRUMENT TRANSFORMER CABINET LOCATIONS

In the interest of providing service to our customers and safe working conditions for our employees, certain locations for equipment installations shall be prohibited. Meters and associated equipment shall not be installed in the following locations **unless prior approval by the Design Build and Metering Services Departments has been given**.

A. In any rest, bath, shower, or toilet room.

B. Directly over any door, window, stairway, ramp, or steps.

C. In any hazardous location.

D. On any roof, attic, or place not in general use.

E. In any basement.

F. In any equipment room.

G. Approval of locations D, E, and F will be based on the following facts:

1. The meter and metering equipment are readily accessible for reading and testing, and access to them does not require procuring a key from the customer or permission to enter on each occasion. If, for any reason the customer (original or future) decides to stop TEP access to a metering location, the meter and metering equipment must be moved to a new approved location at the customer's expense.

2. The location shall not be used to store valuable merchandise, equipment, etc.

3. The location does not require TEP employees to take hazardous or time consuming methods to gain access.

4. The location is not a high security area with restricted access.

H. Any location where moisture, fumes, vibrations, or dust may interfere with the operation or materially damage the meter or metering equipment or may present a hazard to TEP employees.

I. In any substation or transformer vault, unless the meter is in an enclosure which is effectively screened from the high voltage compartment and contains no bare or exposed energized parts. Entry to vaults must be through normal doorways, not manholes, etc.

J. In any enclosed show window or one having a raised platform or behind a sales counter.

K. In or on any transformer cabinet, unless specifically designed and approved for that purpose.

L. In any carport, breezeway or patio. Existing meters may remain in the aforementioned locations; however, the meter must be relocated if the service is upgraded or the location is enclosed.

M. In any school building hallway subject to student traffic.

N. Any location subject to vehicular traffic which will present a hazard to the meter, meter readers, or service men, such as driveways, loading docks, etc.

O. Any location where at least three feet of working clearance is not provided in front of all meter equipment.

P. Any location that will require reading or servicing from within the fenced portion of a freeway.

Q. In any doorway or within 36 inches of any window or doorway.

R. In any elevator shaft or hatchway.

S. On any surface subject to excessive vibration.

T. In any projection room.

U. Directly over any stove or plumbing fixture.

V. On any balcony or mezzanine floor, unless such balcony or mezzanine floor has a clear stairway of normal tread or rise and with utility approval.

W. On the front exterior wall of a residence, unless mutually agreed to by the home builder, or customer and TEP. Other locations may be deemed prohibited by Design, Service Requirements & Service Delivery Dept. because of hazardous conditions or inaccessibility.

X. Any floor above ground floor.

Y. On or enclosed in any bedroom wall or bedroom closet wall.

Z. On or recessed in the external surface of any building that is built within 3 feet of any property line or inline with any walk, alley, or driveway giving access to commercial or Industrial property. Other locations may be deemed prohibited by Design, Service Requirements & Service Delivery Dept. because of hazardous conditions or inaccessibility.

11. WORKING SPACE
A level standing and working surface shall be provided and maintained in front of each metering installation. The service trench will be backfilled to final grade before calling for a metering inspection. The meter height is to be 3' 6" minimum and cannot exceed 6' 3". A clear and unobstructed working space shall be provided above the surface. The width of the working space shall be sufficient to permit ready access to the metering equipment and in no case less than 3'. The height of the working space shall be no less than 7'. The working space shall extend at least 3 feet in front of the surface on which the metering equipment is mounted and no less than 10" from the meter centerline to any obstruction such as walls, plants or trees. (See SR-405 pg. 10)

12. PROTECTION OF METERS AND METERING EQUIPMENT In the interest of public safety and to prevent destruction of the customer's meter socket and TEP or Service Provider's meter, the customer when instructed by TEP shall provide and install a protective cabinet for enclosure of the socket and meter. This requirement shall be mandatory for installations located in parks or school yards. (See SR-420, Page 1, Meter Enclosure Cabinets.)

13. SEPARATION OF WIRING
Unmetered customer service wires and metered load wires are not to be run in the same conduit, raceway, or wiring gutter. **Metered and unmetered wires shall be separated by suitable barriers.** Metered wires from the customer's distribution section (branch circuits) shall not pass through sealable sections.

14. GROUNDING
The meter socket or enclosure shall be effectively grounded in compliance with applicable requirements of local governmental inspection codes, or National Electrical Code requirements in the absence of local codes.

15. GENERAL SERVICE CHANGEOUT OR UPGRADE
TEP will not splice underground service cable. If additional cable length is required due to meterbase changeouts the customer will be required to lower the meter socket to obtain sufficient length or provide a new service conduit system (including new service riser) to TEP equipment. If the current conductor meets TEP's design needs and is damaged, the replacement of the conductor will be billable. Current transformers (CTs) used for transformer-rated metered services are no longer allowed in the secondary compartment of TEP three-phase pad-mount transformers. Upgrades or change-outs of this service type require removal of CTs from the transformer and installation in an approved customer-furnished CT can or switchgear section. Refer to SR-422 and SR-430 for additional information.

16. COLOR CODING FOR 3 PHASE SERVICE CONDUCTORS

Wiring shall be color coded as follows:

Phase	208/120V	240/120V	480/277V
A	Black	Black	Brown
B	Red	Orange	Orange
C	Blue	Blue	Yellow
Neutral	White	White	Gray
Ground	Green	Green	Green

The service conductors shall be marked (taped) at the source and at the termination can or CT can. Start the marking tape 6" from the end of the conduit and for 4" minimal. Each Neutral will have a complete addressed DYMO aluminum label (1/2") installed above this area facing out, so it can be read when accessing the cabinet compartment.

As a reminder when marking the power leg inside of a 240/120V or 480/240V safety socket box, place the conductor in the far right hand side of the safety socket box. Refer to SR-410 page 3 note 11, page 7 note 8, page 10 note 11.

DEFINITIONS

Terms frequently used in this book are herein defined:

ABOVE GROUND PEDESTAL (J-BOX): Houses secondary to service cable connections typically in residential subdivisions.

AIC: Amps Interrupting Current (or short circuit duty) The device rating to safely interrupt the flow of fault current.

ALL-IN-ONE SES (Service Entrance Section): Equipment manufactured as one unit.

AMERICAN WIRE GAUGE (AWG): The AWG assigns a number to a particular size of wire according to circular mill area to a maximum size of #0000.

CITY CLEARANCE: The approval of an electrical installation by the city or county having jurisdiction as an indication of compliance with its standards.

CONTINUOS DUTY RATING: Operation at a substantially constant load for an indefinitely long time.

CONTINUOUS LOAD: A load where the maximum current is expected to continue for three hours or more.

CT'S AND VT'S (INSTRUMENT TRANSFORMERS): Transformers used to change electric current or voltage to values suitable for use in metering the consumption of electric energy.
These are owned, furnished and installed by the Company.

CT CAN (INSTRUMENT TRANSFORMER ENCLOSURE): In general, a metal cabinet owned and furnished by the customer, installed by the customer's electrical contractor, for use by the Company to enclose the Company's instrument transformers. Only CT cans approved by the Company and meeting Company specifications may be installed.

EMT: Electrical Metallic Tubing

EQUIPMENT ROOMS (Commercial and Industrial): An equipment room is an illuminated room provided by the customer for the customer's service entrance equipment. The room doesn't have a doorway opening to the outside of the building or into a public hallway; therefore, TEP / UES or Service Provider's meter or meters must be located on an outside wall in the immediate proximity of the equipment room. **TEP / UES or Service Provider must have access to the equipment room during normal working hours.**

EUSER OR EUSERC (Electric Utility Service Equipment Requirements Committee): The EUSER committee is an organization comprised of utility representatives from the Western Section of the United States which works to promote the standardization of electric service requirements and the design and engineering of metering and service equipment.

FAUL T CURRENT: The short circuit amperage current produced during the unintentional contact of two parts of an electrical circuit that offers an alternate path for current to flow.

GENERAL PUBLIC AREA: An area where the general public has free access.

GROUNDED: Connected to earth or to some conducting body that serves in place of earth.

GROUNDED CONDUCTOR: A system or circuit conductor that is intentionally grounded.

GROUNDING CONDUCTOR: A conductor used to connect equipment or the grounded circuit of a wiring system to a grounding electrode or electrodes.

GROUNDING ELECTRODE: A ground electrode (rod) driven into earth to provide a base reference for voltage and a path to ground for fault current.

DEFINITIONS

IMPAIRED CLEARANCE: The condition where a customer's structure(s), including, but not limited to, buildings, signs, towers, poles, fencing and swimming pools, is in a position or manner in which insufficient clearance, as specified by any applicable local code(s) and the National Electric Safety Code, as such codes now exist or as such codes may be amended, exists between the structure and the Company's existing transmission, substation, express feeder, street light or distribution line facilities, or any combination thereof.

INSTRUMENT TRANSFORMER COMPARTMENT OR CABINET: TEP requires a compartment in the service entrance equipment, or a separate cabinet furnished by the customer for the installation of the TEP or Service Provider's current transformers and, in some cases, voltage transformers. The compartment or cabinet is for TEP or Service Provider use only and shall be locked and/or sealed with TEP or Service Provider seals and locking devices. Contact Service Provider for their requirements. The compartment or cabinet shall not be used as a raceway for customer load conductors, other service conductors or any other equipment. The compartment or cabinet is to be used solely for TEP equipment.

INSTRUMENT TRANSFORMER METERING: Instrument transformers are used when either the current or voltage of a service is too great for a meter supplied by TEP or Service Provider to be installed as a self-contained meter. Current and voltage transformers have "secondary" windings in which the current or voltage is reduced by known ratios from that of the incoming service. These smaller voltages and/or currents are applied to an "instrument-rated" meter, the readings of which must be multiplied by a constant to obtain actual usage of the service. Instrument transformers are normally used on voltages above the nominal 480 Volt level, on 480 Volt services with 201 Amps or
more and on 208Y/120 Volt or 120/240 Volt services with 201 Amps or more.

LOAD: The ratings of the power consuming apparatus which may be connected to TEP's installation or system under consideration.

MANUAL BYPASS: A mechanical jumper installed by a technician to keep the customer in service while a meter is removed for inspection or exchange.

METER ROOM (Commercial and Industrial): A meter room is an accessible, illuminated room provided by the customer for the location of the customer's electric service and metering equipment and for the installation of TEP or Service Provider meter or meters. The meter room may not be used for communications equipment**. The meter room shall not be used for storage, and the working space is to be kept clear and unobstructed.** Meter rooms shall be provided with a doorway opening to the outside of the building or into a public hallway. If there is a single door to the meter room and it must be locked, it must have a double hasp arrangement which will accommodate a TEP or Service Provider lock and the customer's lock. Meter rooms with two points of ingress/egress shall not be locked. Locking mechanism shall not be built into the door and labeled as such. **A lock box or similar setup for a key to be used for the site shall not be acceptable.** A double hasp arrangement shall be accepted.

METER ENCLOSURE: A Company-approved metal cabinet owned and furnished by the customer and installed by the customer's electrical contractor to enclose the Company's metering equipment. Meter enclosures will be sealed by the Company with Company's seal or lock.

POWER LEG (WILD LEG): The "C" (third) phase of a 4-wire delta secondary service shall be marked "orange". Orange colored vinyl electrical tape is an acceptable means for marking the conductor.

SECURELY ATTACHED: Attached to withstand anticipated loads not subject to loosening.

SELF-CONTAINED METERING: A self-contained meter is one which, when installed on a socket or mounting device, is capable of carrying the total current of the service supplied to the customer and of being directly connected to the line voltage of the service.

SERVICE ENERGIZATION: The connection of a service to a voltage source.

TYPE OF SERVICE: The characteristics of electric service described in terms of voltage, phase, frequency and number of wires.

WILD LEG: See "POWER LEG".

WITHSTAND CURRENT RATING: The maximum fault current rating that the device is rated to withstand.

METERING INSTALLATION

USE: Requirements for
Residential Socket
Max. 200 amp Service

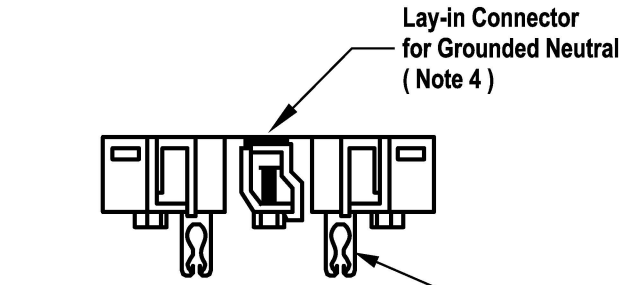

TOP VIEW - FIG. 1

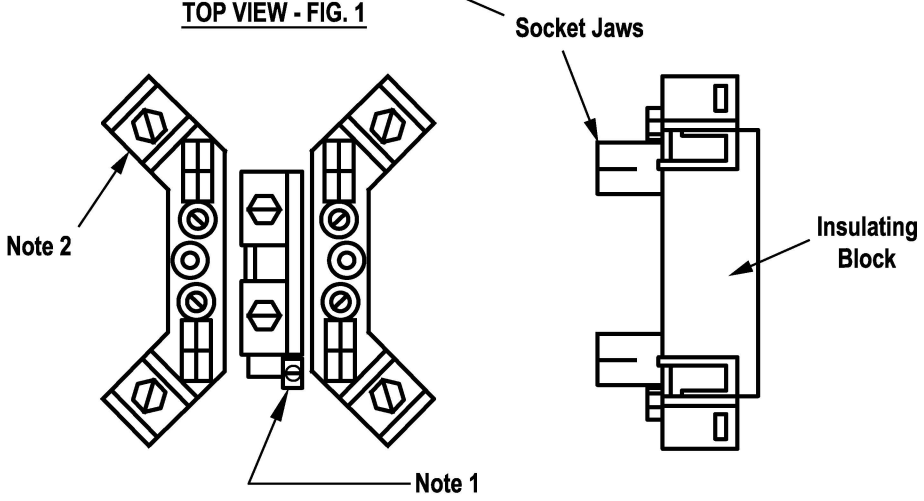

FRONT VIEW - FIG. 3

SIDE VIEW - FIG. 2

NOTES:

1. Neutral tap required for 5 jaw sockets only, 120/208V, 1Ø.
2. For underground service, line side connectors must be lay-in type approved for copper or aluminum conductor and shall be capable of accepting #6 to1/0 AWG (100A) or 1/0 AWG to 250 kcmil (200A). For overhead service, they must accommodate customer's line and load conductors without removal of strands from ends of conductors.
3. Sockets must conform to ANSI C12.7 and be listed by a qualified electrical testing laboratory per NEC.
4. For underground service, the lay-in connnector for grounded neutral must be suitable to terminate line and load neutral conductors in the socket and shall be bonded to enclosure. Line side neutral connector must be approved for copper and aluminum conductor and accept 1/0 through 3/0 AWG conductor.
5. Residential sockets shall have a maximum ampere rating not less than the rating of the main switch or service equipment. Maximum ampere rating of socket is 125 % of continuous duty rating.
6. Only ring-type sockets will be approved.
7. Socket cover shall not be removable without removing meter. Latching device or mounting screws shall be accessible only after meter is removed. See SR-418 for meter pack requirements.

METER INSTALLATION

USE: Specifications for Meter Enclosures & Clear Working Space

EUSERC DWG. NO. G6 & G7

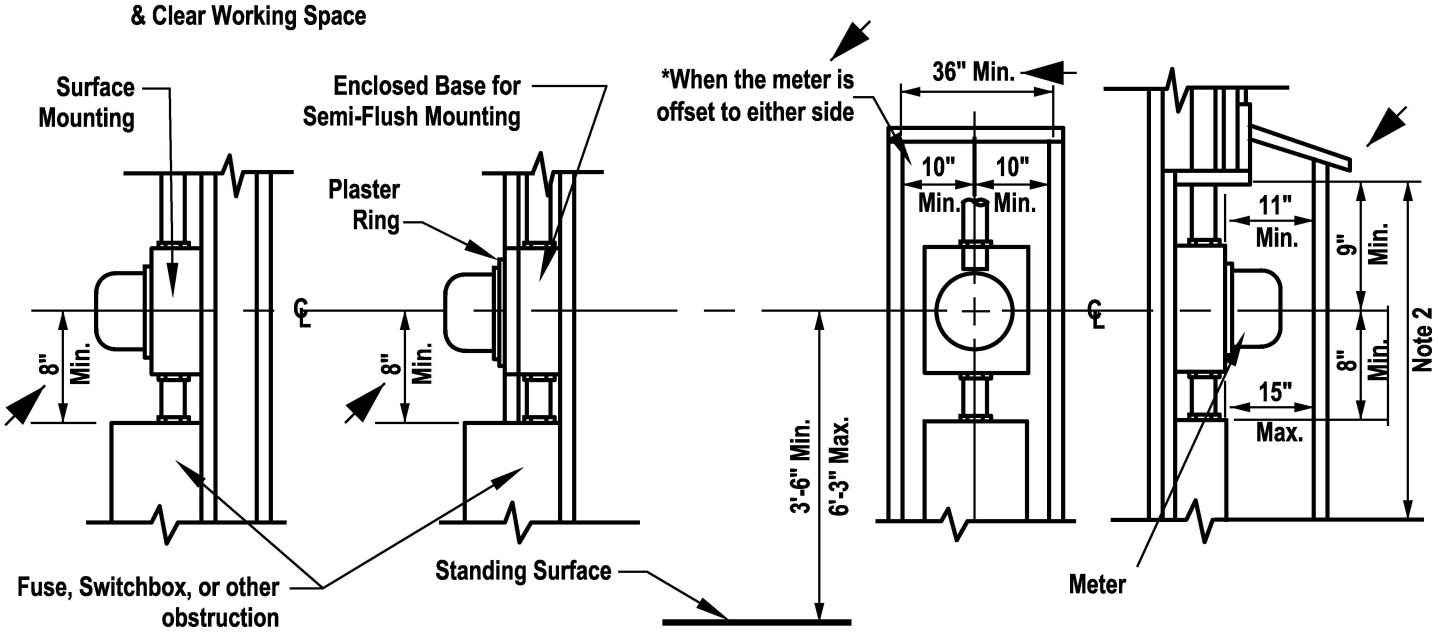

NON-ENCLOSED MOUNTING

ENCLOSED MOUNTING

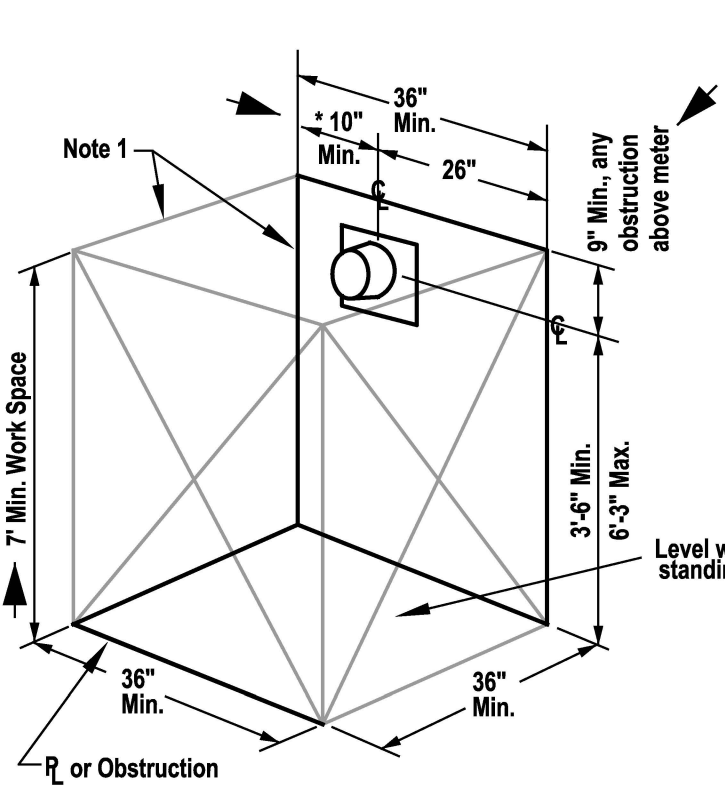

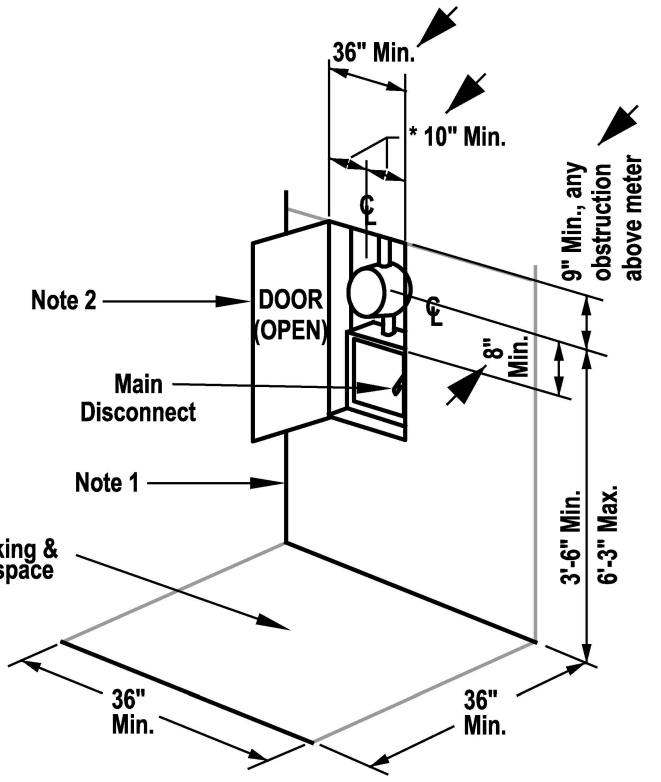

SEMI-FLUSH METER INSTALLATION

ENCLOSED METER INSTALLATION

NOTES:
1. Nearest side wall or other obstruction.
2. Door opening for both meter and main disconnects shall be high and wide enough to provide full access. Door must be installed on hinges with a single latch.
3. See note 11 of SR-405 pg. 5

METER SOCKET WIRING DETAILS
(Ring type CL-100 Socket)

USE: Residential and small commercial 100 A, 3-Wire overhead service or 30 A maximum 2-Wire overhead or underground service.

Refer to SR-452 for the complete Approved Metering and Service Equipment list

2W, 30 A Max. Services
For Maintenance Only

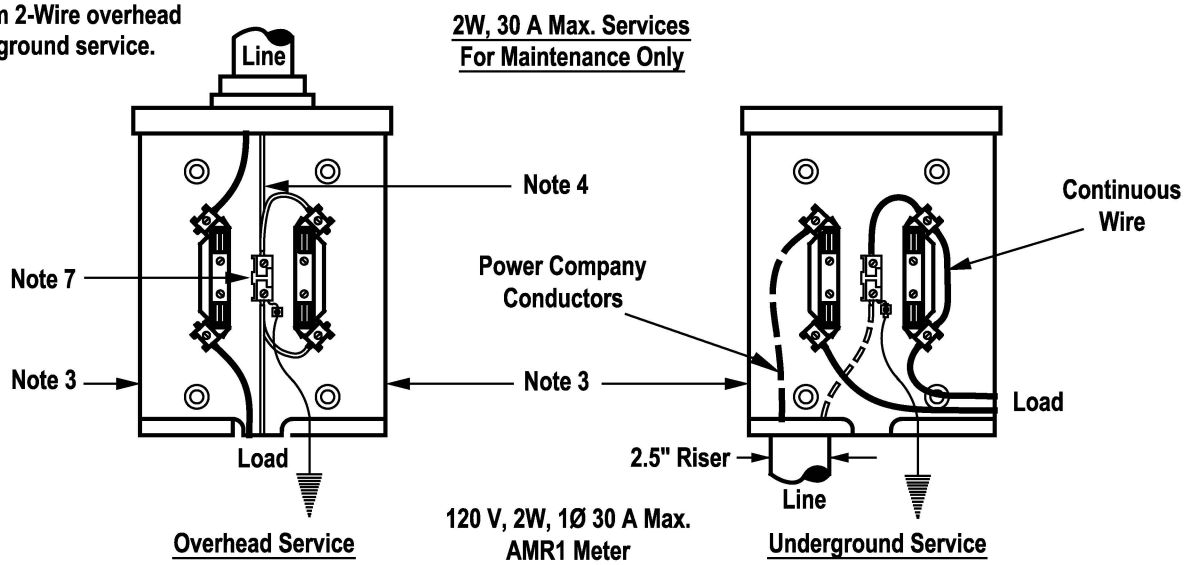

3W, 100 A Max. Overhead Services

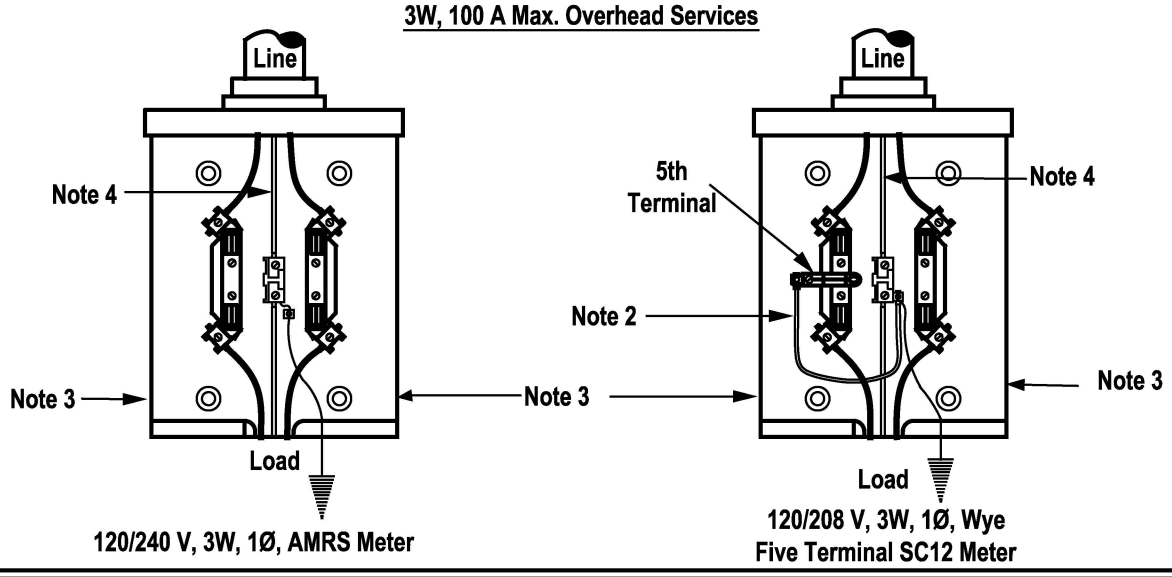

NOTES:

1. Small commercial defined as permanently unoccupied facilities, such as construction power, billboards, wells, etc.
2. Use #12 THHN or THW, white in color, for neutral potential lead to connect 5th terminal to neutral connection.
3. Optional load conductors exit. Plug any hole in socket not used for conductors.
4. Neutral conductor must be identified at the socket and weatherhead if service is overhead.
5. Refer to SR-405, Pg. 9 for approved socket interior.
6. Round sockets may be used on overhead installations.
7. Neutral connector shall be bonded to socket enclosure.
8. Refer to SR-408, Pgs. 2 & 3 for 200A max. OH/UG commercial services where a bypass system is not required.

METER SOCKET WIRING DETAILS
(Ring type Socket Class 200)

USE: Residential & Permanently
Unoccupied Commercial
Overhead 1Ø
200 Amp. Service

Refer to SR-452 for the complete
Approved Metering and Service Equipment list

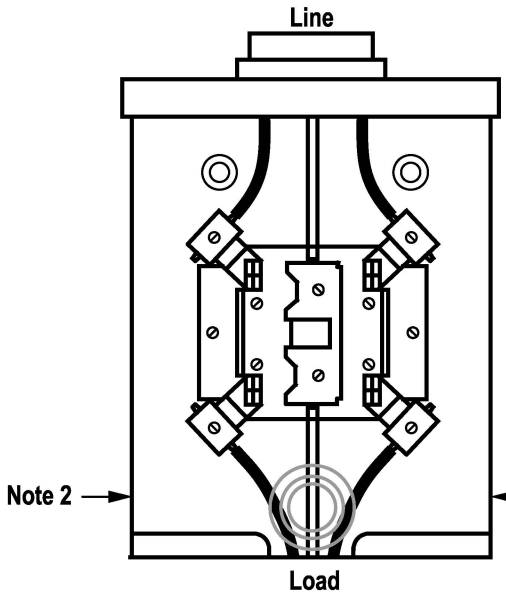

Figure 1
120/240 V, 3W, 1Ø

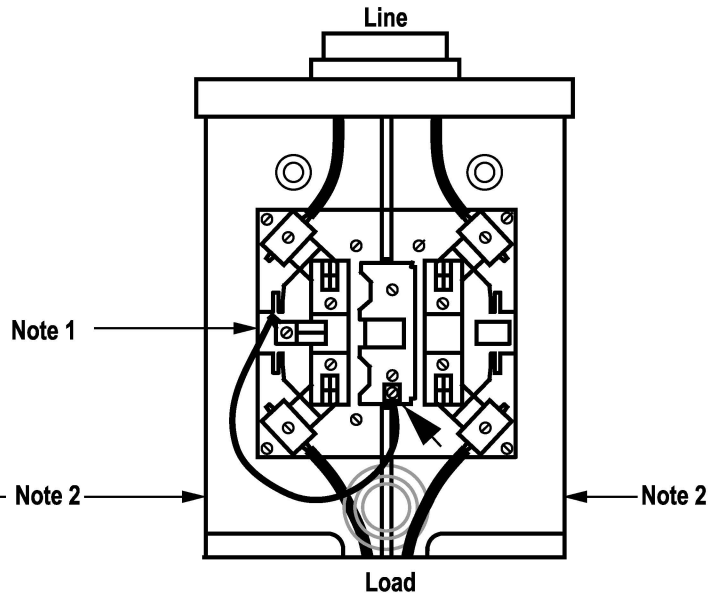

Figure 2
120/208 V, 1Ø, Wye

NOTES:

1. For Figure 2, install fifth terminal jaw in 9 o'clock position and connect to neutral connection with No. 12 THHN or THW sol. copper.
2. Optional load conductor exit.
3. Refer to SR-405, Pg. 9 for approved socket interior.
4. Neutral conductor must be identified at the socket and weatherhead.
5. Permanently unoccupied commercial installations defined as water wells, billboards, irrigation systems, etc. This installation for unoccupied services does not have bypass capabilty.

Formerly SR-408
Pg. 3 of 7

METER SOCKET WIRING DETAILS
(Ring Type Class 200 Socket)

USE: Residential & Permanently
Unoccupied Commercial
U.G. service
0-200 A, 3-Wire, 1Ø

Refer to SR-452 for the complete
Approved Metering and Service Equipment list

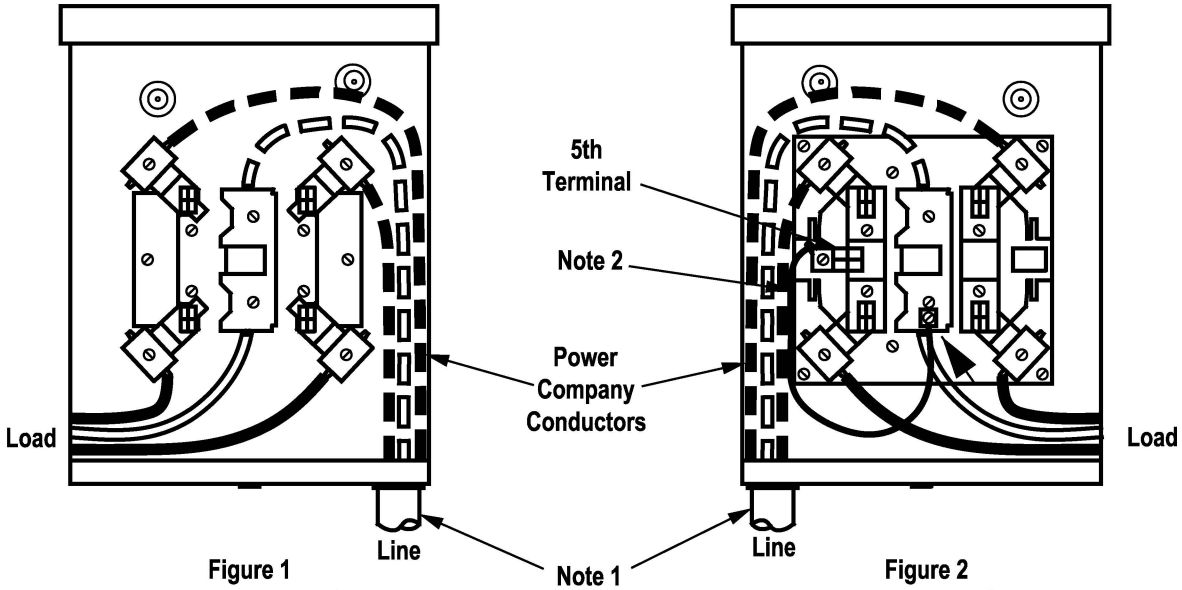

Figure 1
120/240 V, 3W, 1Ø

Figure 2
120/208 V, 3W, 1Ø Wye

NOTES:

1. 2-1/2" conduit riser for underground service must enter socket on the side opposite from that of the load conductors exit.
2. For Fig. 2 install fifth terminal jaw in 9 o'clock position and connect to neutral connection with No. 12 THHN or THW Solid Cu.
3. Lay-in grounded neutral connector must be suitable to terminate service neutral conductor in socket.
4. Line connectors must accommodate up to 250 kcmil AL stranded conductor.
5. Neutral lug shall be bonded to socket enclosure.
6. Minimum dimensions: 11" wide, 14" high, 4-1/2" deep.
7. Refer to SR-405 Pg. 9 for approved socket interior.
8. Permanently unoccupied commercial installations defined as water wells, billboards, irrigation systems, etc.

Formerly SR-408
Pg. 4 of 7

UNDERGROUND COMBINATION METER AND DISTRIBUTION SECTION

USE: Single Family
Residential
120/240 V, 3-Wire, 1Ø

EUSERC DWG. NO. 301

Refer to SR-452 for the complete
Approved Metering and Service Equipment list

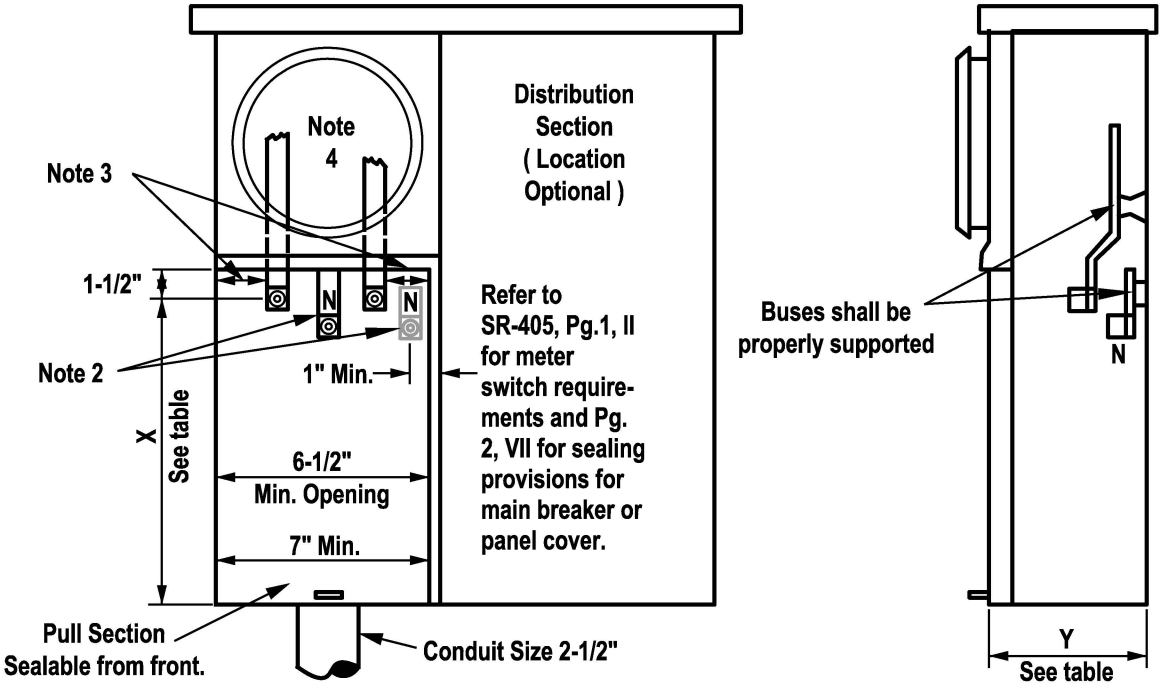

Maximum Ampacity	"X" Min. Dim.		"Y" Min. Dim.	Connector Range
	Barrel-Type Lugs	Lay-In Lugs		
125	8"	6"	4"	#6-1/0 AWG
225	11"	8 1/2"	5-1/2"	1/0 AWG- 250 kcmil

NOTES:

1. Terminals for service conductors shall be aluminum bodied lugs.
2. Neutral terminal shall be a minimum dimension from the bottom of the enclosure of 6" (lay-in lugs 5") for the 125 A device and 8-1/2" (lay-in lugs 6-1/2") for the 200 A device. Neutral bus shall be bonded to enclosure.
3. A minimum radial clearance of 1-1/2" shall be provided between hot bus terminals and ground or neutral surfaces.
4. Socket interior must conform to SR-405, Pg. 9.
5. This equipment may be constructed for Overhead (OH), Underground (UG), or for combination OH/UG service applications. When built as an OH/UG device, a yellow caution label (2" x 3" min.) shall be installed below the termination in the pull section reading "Caution - Bus Energized at ALL times".
6. Pull section and breakers in distribution section must comply with sealing provisions specified in SR-405, Pg. 2.

Formerly SR-408
Pg. 5 of 7

SERVICE ENTRANCE
METER POST

UNDERGROUND SERVICE
0-200A, 120/240V.
3-WIRE 1Ø

EUSERC DWG. NO. 307
Refer to SR-452 for the complete
Approved Metering and Service Equipment list

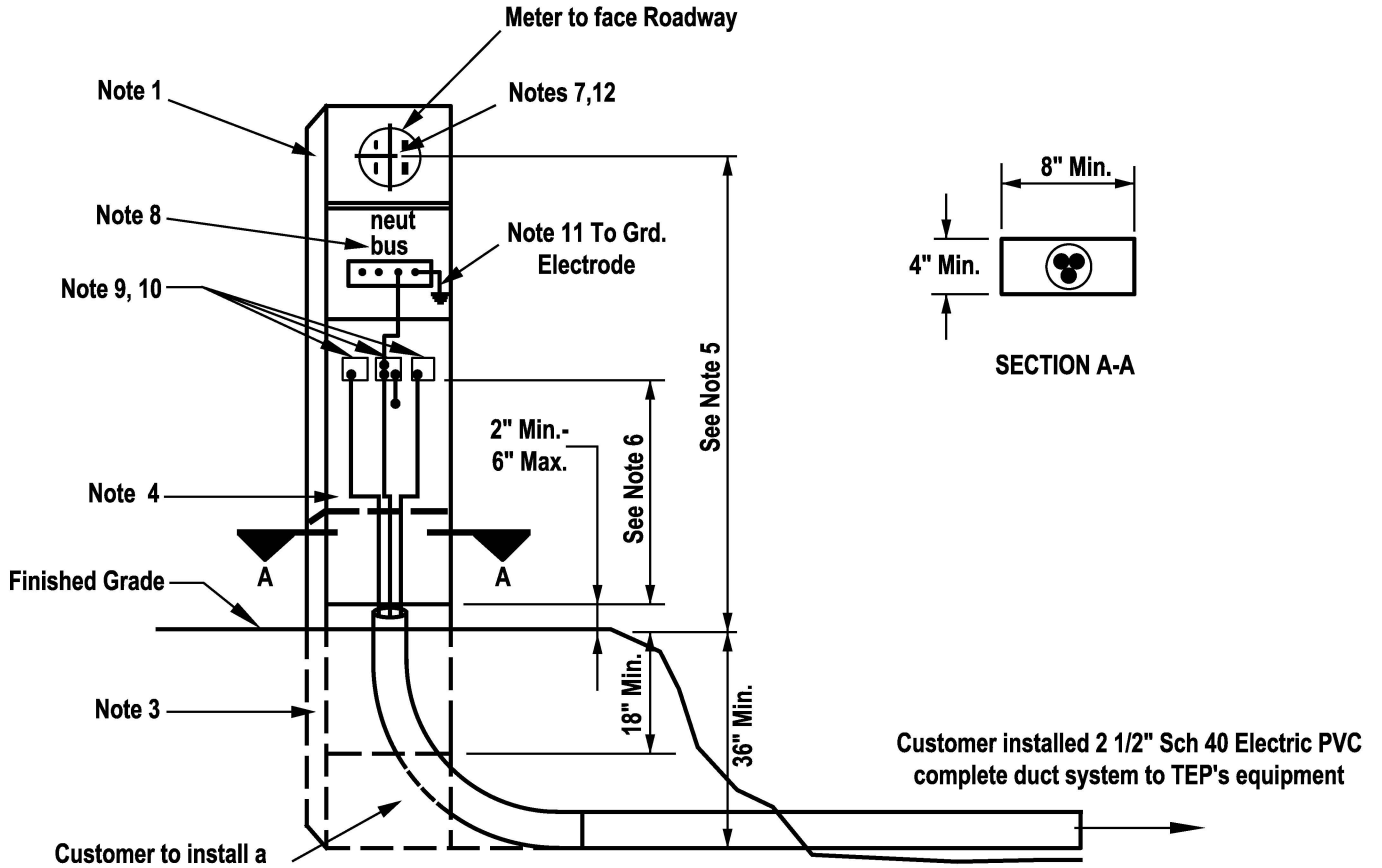

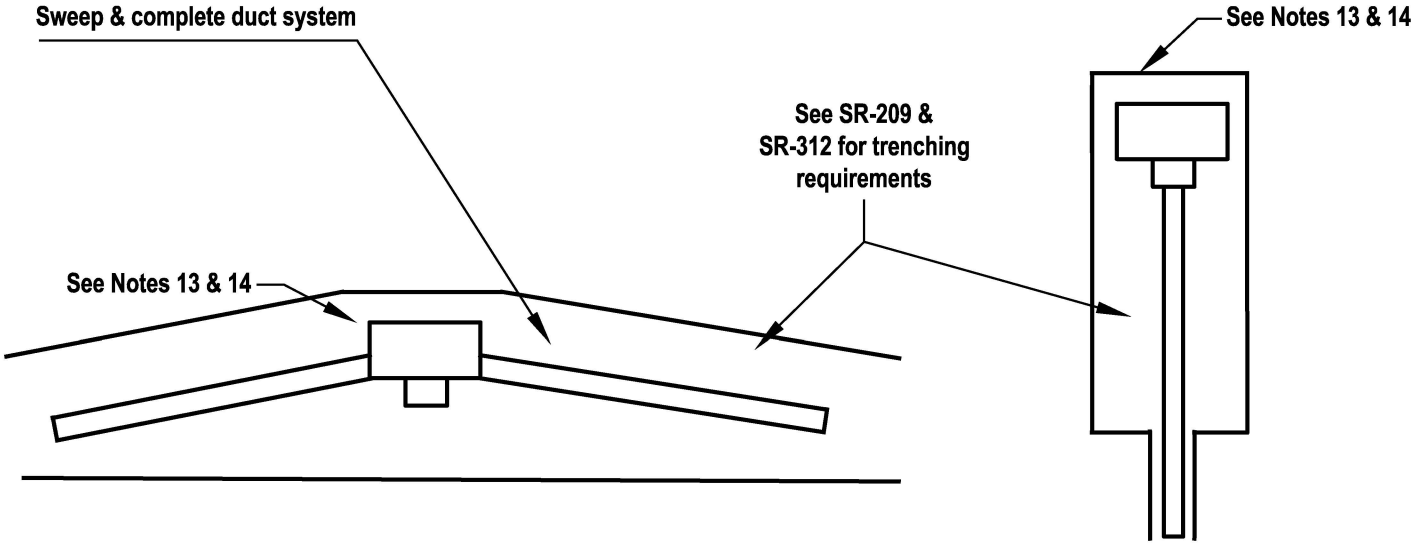

Typical "Feed-Thru" Customer
Pedestal Configuration
Plan View

Typical "Single Feed" Customer
Pedestal Configuration
Plan View

Formerly SR-408
Pg. 6 of 7

USE: Underground Service
0-200a., 120/240v. 3-wire 1 Phase

SERVICE ENTRANCE METER POST

EUSERC NO. 307

GENERAL CONSTRUCTION

1. This type post shall have a minimum rating of 100 amperes. Construction, material, and corrosive-resistant finish shall be approved by a Committee-recognized test laboratory.
2. The post shall have a minimum cross sectional dimension of 4 inches x 8 inches ID, min. access opening width 7 1/2 inches.
3. The minimum depth of the post in the ground shall be 24 inches, with openings at the base sufficient to permit 2 1/2" x 36"- 90° elbow(s) to sweep into the post from the front (meter side). A fixed panel shall extend 2 inches minimum to 6 inches maximum above grade, and 18 inches minimum below grade.
4. Adequate ventilation shall be provided to inhibit the condensation of moisture within the enclosure such as required by UL-231.
5. The minimum meter height shall be 48 inches above grade line when the meter is exposed or 36 inches when enclosed with a shatter proof window through which to read the meter.
6. The service cable pull and terminating section shall be accessible from either the front or rear of the post by removing an 8 inch minimum width sealable panel (or panels). All removable panels must be equipped with sealable fasteners. The removable panel (or panels) shall extend from the top of the fixed panel (see Note 3) and when removed, allow full access to the terminating lugs. The service cable pull and termination section space shall be restricted to serving agency use only.
7. If the meter is enclosed, the enclosing cover shall be hinged and self-supporting, equipped with a shatter proof reading window and be removable for meter testing or inspections.
8. The service main disconnect and power outlet section shall have barriers installed to prevent access to the service cable pull and termination section and to unmetered conductors which connect to the socket.

SERVICE TERMINATING FACILITIES:

9. The service terminating lugs shall be twin No. 2 to 350 kcmil aluminum bodied pressure type lug height, measured to the bottom of terminating lug from the grade line, shall be 18 inches minimum and 48 inches maxium. The space between termination lugs, from lugs to sides of post, from lugs to any grounded surface, or from lugs to panel above shall be 1-1/2 inches minimum. Rigid insulating barriers are required and shall project 1/4 inch minimum beyond any energized parts when this space is reduced. Terminating lugs may be positioned either in line or staggered, and access shall be unobstructed when all service conductors are in place.
10. The neutral terminating lug, shall be bonded to the enclosure.

GROUNDING FACILITIES:

11. An accessible equipment grounding lug shall be provided in accordance with UL-414. The service disconnect switch shall be effectively grounded per local governmental code or national electrical code requirements in the absence of local codes.

METERING FACILITIES:

12. The meter socket base shall be fabricated with components tested by a EUSERC recognized test laboratory and shall be provided with a sealing ring. See SR-405, pg. 9 for additional requirements. The meter socket shall be mounted on support and attached to meter panel. The socket shall be factory-wired with the conductors located in a separate or barriered raceway from the service terminating lugs to the meter socket. The conductors which extend to the meter socket shall be connected at the service terminating lugs independently of the connection for the service lateral conductors.
    Dual socket meter posts are acceptable.

INSTALLATION:

13. The customer is to obtain a service installation date from the company and be responsible for having the meter post(s), elbow(s) and complete conduit system installed at each location per the drawing on Page 6. The meter post to be in a upright and plumb position with backfill and tamping to support the meter post. These installations will all be completed prior to TEP's arrival.

14. Prior to TEP's service installation, the customer is to backfill and compact the service trench. After the backfill has been completed the customer will be responsible for any cost incurred by TEP should a relocation of the meter post be requested by the customer. Relocation work by TEP, anytime after the initial terminations have been made will be billable to the customer.

15. **An approved disconnecting means will be required prior to service being turned on for an individual applicant.**

ENCLOSURE ATTACHMENT:

16. For authorization to attach telephone & cable t.v. terminating facilities to the post, contact Design, Service Requirements & Service Delivery Department.

Formerly SR-408
Pg. 7 of 7

Use: Service meter panels installed within public ROW or common public areas

PUBLIC AREA SERVICE PEDESTALS
0-200 AMPERES 0-600 VOLTS

EUSERC DWG. NO. 308

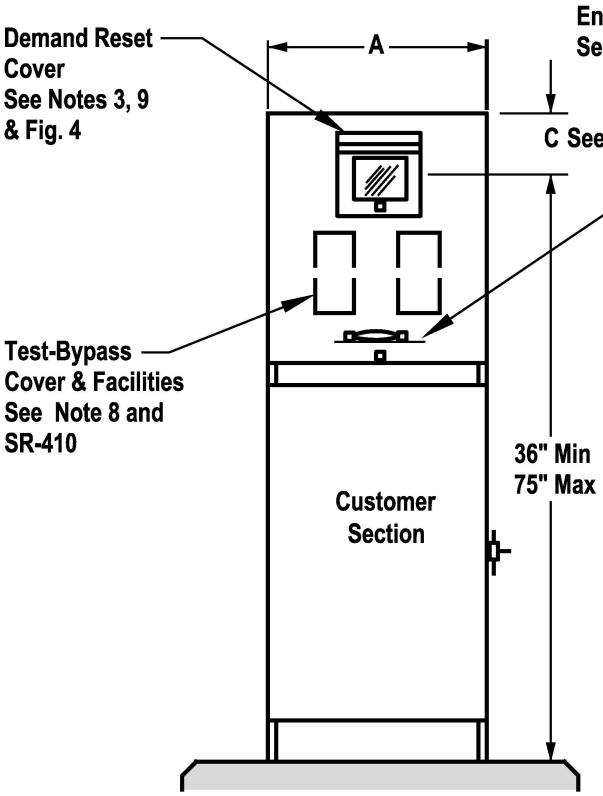

FIG. 1
FRONT VIEW

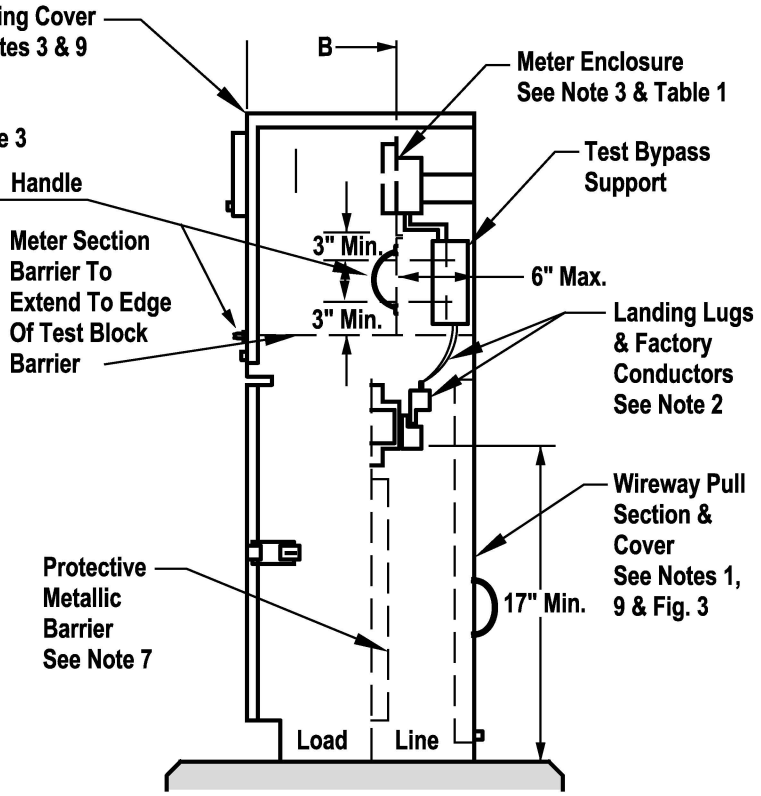

FIG. 2
SIDE VIEW

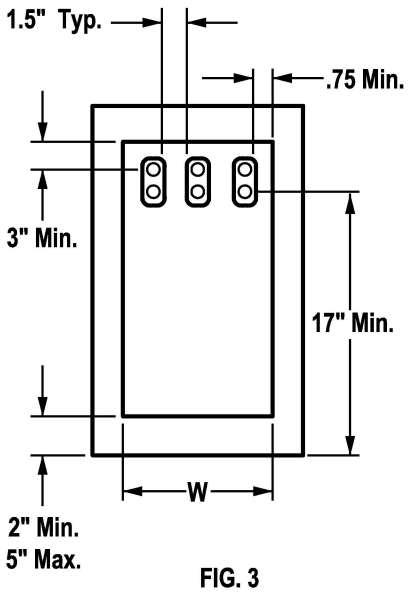

FIG. 3
WIREWAY PULL SECTION

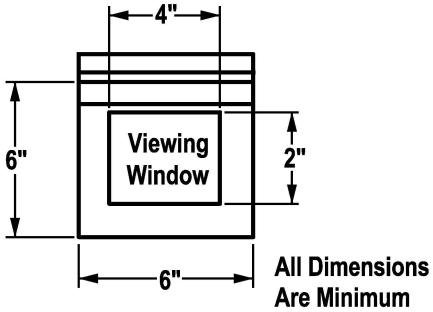

FIG. 4
DEMAND RESET COVER

Min. Dimensions in inches

Service	W	A	B	C
1 PH	10.5	20	11	9
3 PH	12.5			

Table 1

NOTES

1. Wireways shall be dimensioned as shown in Table 1. These dimensions are the minimum access openings allowed for these types of termination sections. The bottom of wireway shall accept a 3 inch minimum conduit.

2. Service conductors are to be terminated on landing lugs. The service terminating lugs shall be #6 through 350 kcmil pressure-type, CU-AL listed. Insulated cable or buss shall be installed between the landing lugs and the test-bypass facilities.

3. The meter shall be enclosed. The enclosing cover (top and front) shall be hinged or the top may be fixed in place if the front is removable. When the top is fixed in place, dimension "C" from Table #1 must be maintained. When the top and front are hinged, dimension "C" does not apply. If the sides are removable, dimension "A" does not apply. A demand reset cover constructed of steel shall be provided. This cover shall have a polycarbonate viewing window and hinged, and comply with the minimum dimensions as shown in Figure 4. A hinged enclosing cover shall not exceed 25 pounds.

4. Ringless sockets are not acceptable.

5. Internal equipment shall be secured in place without screws or nuts on the outer surface of the enclosure that may be loosened from the outside.

6. For structural mounting and support of the pedestal consult the serving agency.

7. A protective metallic barrier (16 gauge minimum) shall be installed between the utility wireway and the customer distribution section. There shall be a 1/4" minimum clearance between the customer section and protective barrier to prevent screws and bolts from protruding into the termination section.

8. Test-bypass blocks with rigid insulation barriers shall be furnished, installed and wired or bussed to the meter socket by the manufacturer. Connection sequence is LINE-LOAD from left to right. Each line and load position shall be clearly identified by 3/4" minimum block letter labeling. Test-bypass cover panels shall be sealable and fitted with a lifting handle. All panels exceeding 16 inches in width shall require two lifting handles.

9. All utility compartments (meter cover, demand reset cover, and pull section) shall be sealable and padlockable.

10. See SR-452 for the approved service pedestal list.

11. The customer is to provided and install a 2.5" total conduit system per SR-205, SR-207, SR-209, SR-310, SR-312, and SR-405.

The Designer or Field Technician will determine the location where the new service is to be installed.

USE: 1Ø 120/240V (9)
100A & 200A
4 Terminal

SAFETY SOCKET BOX
(With Factory Installed Test-Bypass Facilities)

EUSERC Dwg. No's 304 & 305

Refer to SR-452 for the complete Approved Metering and Service Equipment list

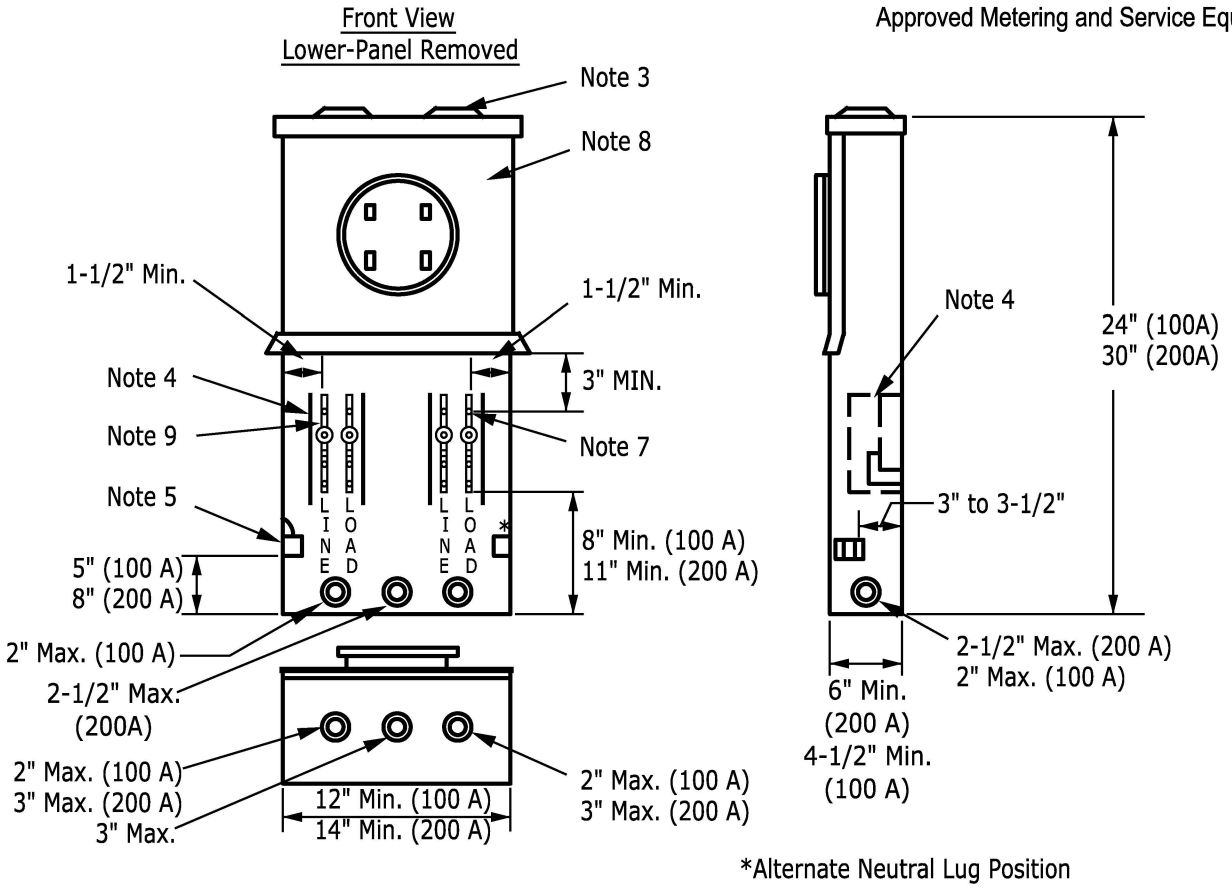

*Alternate Neutral Lug Position

NOTES:

1. This device may be used for terminating/pulling and meter socket box for an underground service.
2. Aluminum bodied terminals for No. 6 through No. 1/0 AWG wire (100 A) or 1/0 AWG through 250 kcmil (200A).
3. Hubs capped off if used for underground feed.
4. Rigid insulating barriers.
5. Insulated bondable vertical lay-in, double neutral lug with No. 1/0 (100 A), No. 250 kcmil (200 A), AWG wire capacity mounted on either sidewall. Neutral lug shall be bonded to enclosure.
6. Test-bypass blocks shall be bussed or wired to socket jaws or terminals.
7. Upper test connector studs.
8. All section panels shall be independently removable. Upper panel shall be non-removable when meter is in place. Meter socket shall be mounted on support and attached to upper panel. Lower panel shall be sealable and permanently labeled: DO NOT BREAK SEALS, NO FUSES INSIDE."
9. Test-bypass block detail. See SR-410, page 3.
10. For 1ø, 3 wire, provide two test-bypass blocks mounted in the outer positions and a four jaw socket (Form 2 meter). (9)
11. Permanent label on inside back of enclosure is 3/4" (min.) high block letters.
12. For switchboard application, refer to SR-410, page 6.
13. This socket is required for multi-metered commercial applications, SR-418.
14. Refer to SR-408, pages 1, 3 and 4 for socket requirements for permanently unoccupied commercial installations such as water wells, billboards, irrigation systems, etc., where a bypass system is not needed.
15. Minimum width of access opening shall be 11-1/2" for 100A, 13-1/2" for 200A socket.
16. When installing a safety socket for metering of street light installations or in parks, school yards and other areas subject to vandalism, install a protective cover (Meter Devices/Brooks Cat. #4042) on the meter base.

USE: 1Ø, 208V, 277V, 480V, 240/480V (9) 100A & 200A, 5 Terminal

SAFETY SOCKET BOX
(With Factory Installed Test-Bypass Facilities)

EUSERC Dwg. No's 304 & 305

Refer to SR-452 for the complete Approved Metering and Service Equipment list

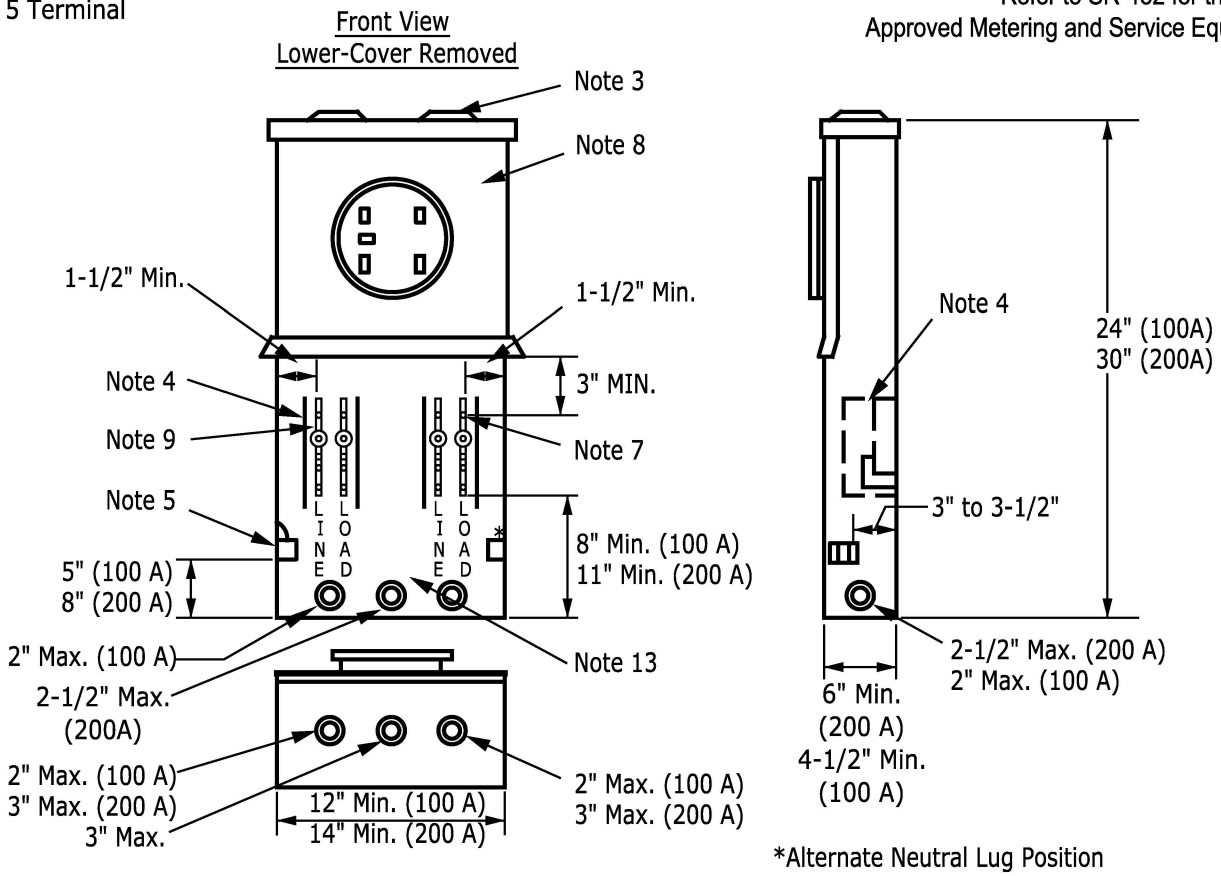

NOTES:

1. This device may be used for terminating/pulling and meter socket box for an underground service.
2. Aluminum bodied terminals for No. 6 through No. 1/0 AWG wire (100 A) or 1/0 AWG through 250 kcmil (200A).
3. Hubs capped off if used for underground feed.
4. Rigid insulating barriers.
5. Insulated bondable vertical lay-in, double neutral lug with No. 1/0 (100 A), No. 250 kcmil (200 A), AWG wire capacity mounted on either sidewall. Neutral lug shall be bonded to enclosure.
6. Test-bypass blocks shall be bussed or wired to socket jaws or terminals.
7. Upper test connector studs.
8. All section panels shall be independently removable. Upper panel shall be non-removable when meter is in place. Meter socket shall be mounted on support and attached to upper panel. Lower panel shall be sealable and permanently labeled: DO NOT BREAK SEALS, NO FUSES INSIDE."
9. Test-bypass block detail. See SR-410, page 3.
10. For 1Ø, 3 wire, 208V, 277V, 480V, or 240/480V, Form 12 meter, provide two test-bypass blocks mounted in the outer position and a five jaw socket. Connect 5th jaw of meter socket to body of neutral lug with #12 min. copper wire, white in color. The 5th jaw of the meter socket is to be securely attached to the meter socket.
11. Permanent label on inside back of enclosure is 3/4" (min.) high block letters.
12. For switchboard application, refer to SR-410, page 6.
13. This socket is required for multi-metered commercial installations, SR-418.
14. Refer to SR-408, pages 1, 3 and 4 for socket requirements for permanently unoccupied commercial installations such as water wells, billboards, irrigation systems, etc., where a bypass system is not needed.
15. Minimum width of access opening shall be 11-1/2" for 100A, 13-1/2" for 200A socket.
16. When installing a safety socket for metering of street light installations or in parks, school yards and other areas subject to vandalism, install a protective cover (Meter Devices/Brooks Cat. #4042) on the meter base.

SAFETY SOCKET BOX
(With Factory Installed Test-Bypass Facilities)

EUSERC Dwg. No's 304 & 305

USE: 3Ø 120/208V, 120/240V, 277/480V, 240/480V, 100A & 200A. 7 terminal.

Refer to SR-452 for the complete Approved Metering and Service Equipment list

Front View
Lower-Cover Removed

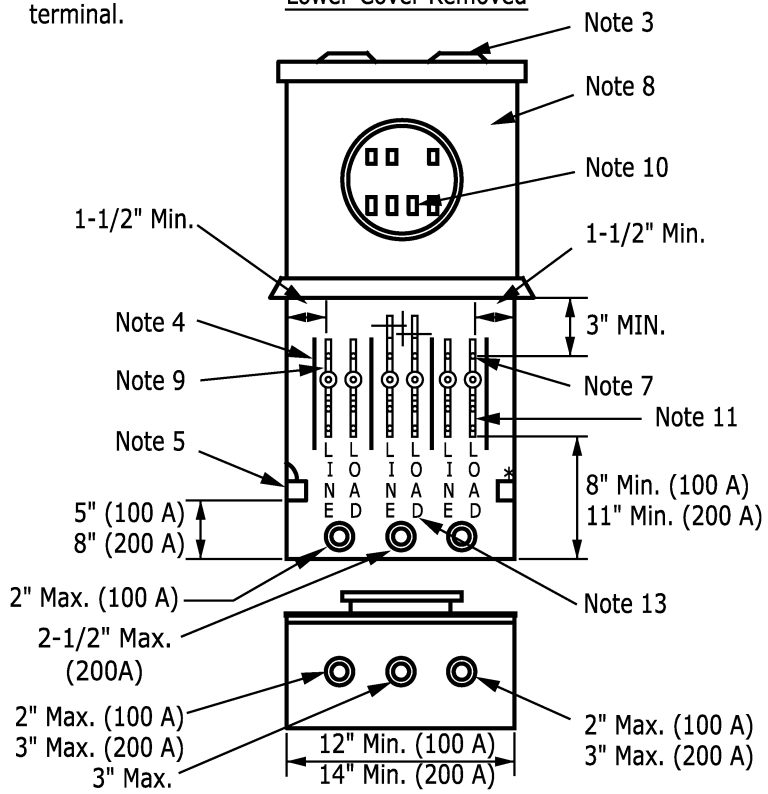

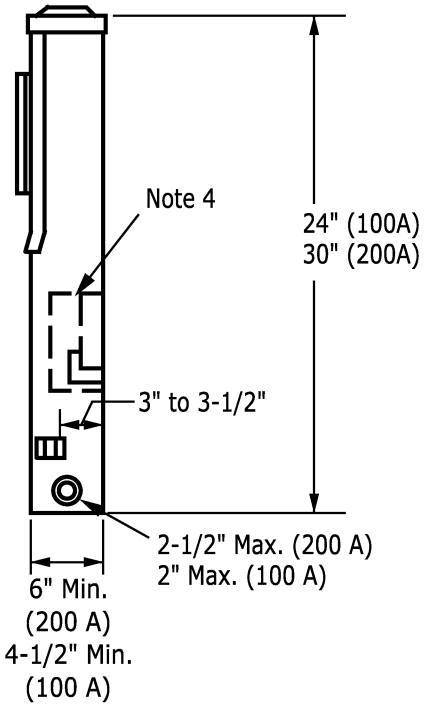

*Alternate Neutral Lug Position

NOTES:

1. This device may be used for terminating/pulling and meter socket box for an underground service.
2. Aluminum bodied terminals for No. 6 through No. 1/0 AWG wire (100 A) or 1/0 AWG through 250 kcmil (200A).
3. Hubs capped off if used for underground feed.
4. Rigid insulating barriers.
5. Insulated bondable vertical lay-in, double neutral lug with No. 1/0 (100 A), No. 250 kcmil (200 A), AWG wire capacity mounted on either sidewall. Neutral lug shall be bonded to enclosure.
6. Test-bypass blocks shall be bussed or wired to socket jaws or terminals.
7. Upper test connector studs.
8. All section panels shall be independently removable. Upper panel shall be non-removable when meter is in place. Meter socket shall be mounted on support and attached to upper panel. Lower panel shall be sealable and permanently labeled: "DO NOT BREAK SEALS, NO FUSES INSIDE."
9. Test-bypass block detail. See SR-410, page 3.
10. For 3Ø, 4 wire, connect 7th jaw to body of neutral lug with #12 AWG copper wire white in color (seven jaw socket).
11. For 3Ø, 240/120V, 4 wire Delta, identify right hand side of the test-bypass block, line and load side (2 poles) as the power leg (seven jaw socket).
12. Permanent label on inside back of enclosure is 3/4" (min.) high block letters.
13. For switchboard application, refer to SR-410, page 6.
14. This socket is required for multi-metered commercial installations, SR-418.
15. Refer to SR-408, pages 1,3 and 4 for socket requirements for permanently unoccupied commercial installations 15. such as water wells, billboards, irrigation systems, etc., where a bypass system is not needed.
16. Minimum width of access opening shall be 11-1/2" for 100A, 13-1/2" for 200A socket.
17. When installing a safety socket for metering of street light installations or in parks, school yards and other areas subject to vandalism, install a protective cover (Meter Devices/Brooks Cat. #4042) on the meter base.
18. All meter sockets and services are to identified with an address tag as per SR-405 note 5 and 16.
19. All conductors shall be color code indentfied as per SR-405 note 16.

TEST-BYPASS BLOCK
100 and 200 Amp.

Use: Test Bypass/Disconnect Block for Safety Socket

EUSERC DWG No. 311

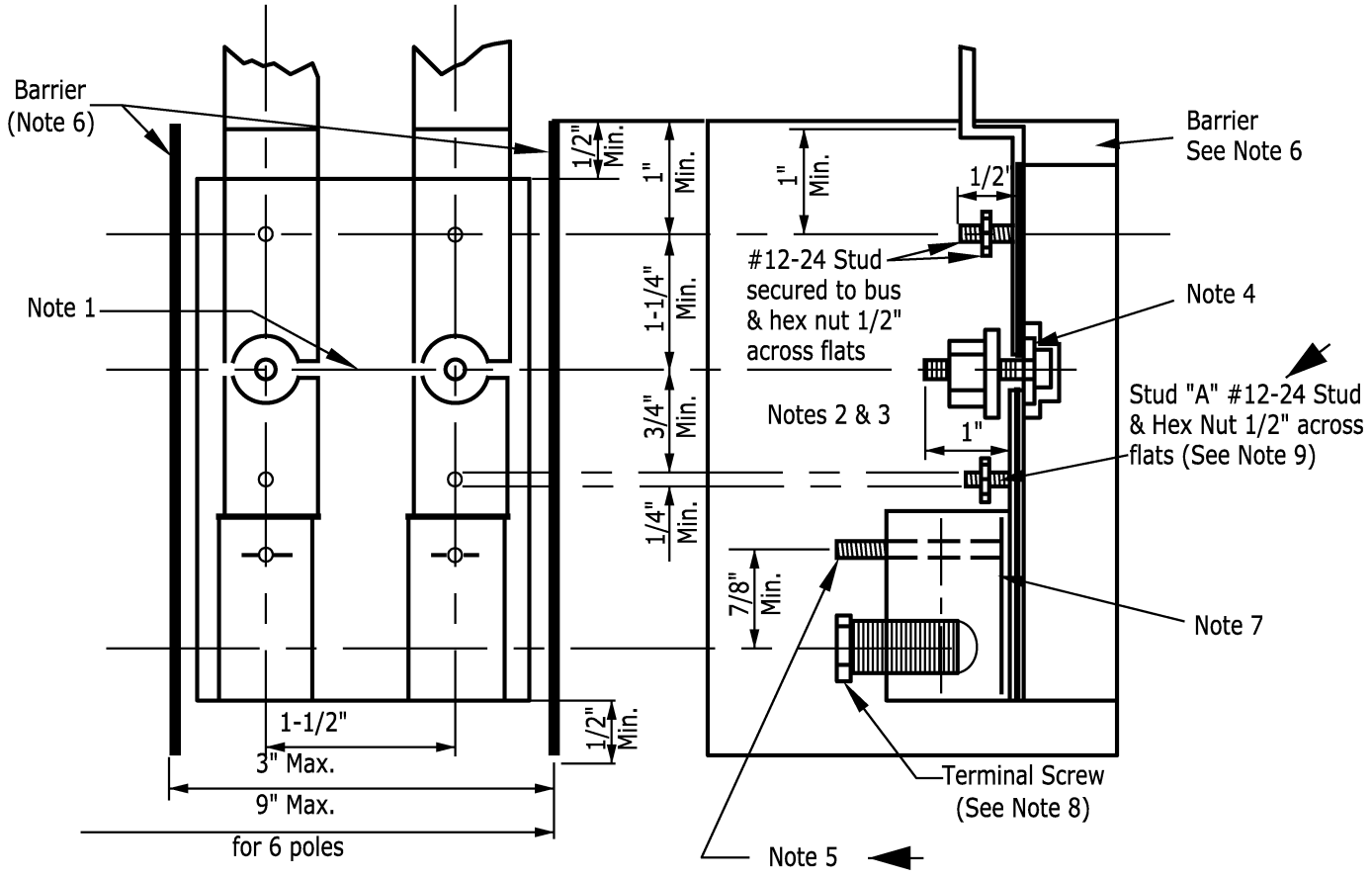

NOTES:

1. Distance between upper and lower bus sections shall not be less than 1/4 inch when shorting nut is backed off.
2. Circuit-closing nut shall be a hex nut 5/8 inch across flats with plated copper washer attached and have threads counter-bored at bottom to facilitate re-installation. Bolt head shall be secured in place to prevent turning and backout.
3. The circuit-closing nut and bolt assembly shall maintain the applied contact pressure between the plated copper washer and the bus members of the test-bypass block.
4. Insulating washer shall be made from dimensionally stable, nontracking material and shall provide a minimum of 1/8 inch creep distance between the bolt and the bus sections. Bus sections shall be plated.

NOTES: (continued)

5. Wire stops shall extend to center of terminal opening or beyond. The wire stop studs shall not be used for the purpose of modify mounting of terminal connectors.
6. Rigid insulating barriers shall project at least 1/4 inch beyond any energized parts when the maximum wire size is installed.
7. Terminals shall be aluminum bodied. For required conductor range, see SR-410,Pgs. 1 & 2. The opening shall extend through the terminal body and, if wire hole is round, shall be chamferred as necessary to facilitate installation of the largest size wire.
8. The terminal screw may be of the Allen type (3/16 inch across flats for 200 amp). If stud "A" is a part of the terminal screw, the terminal screw shall be 5/8 inch hex across flats.
9. Stud "A" shall be located in the clear area between the terminating lug and the circuit-closing nut, and may be positioned on the terminal body, on the terminal screw, on the bus member, or incorporated as part of the wire stop.

SWITCHBOARDS

USE: For self-contained metering single and three phase, four wire services maximum capacity 200 amperes 0-600 volts

EUSERC Dwg. No. 306

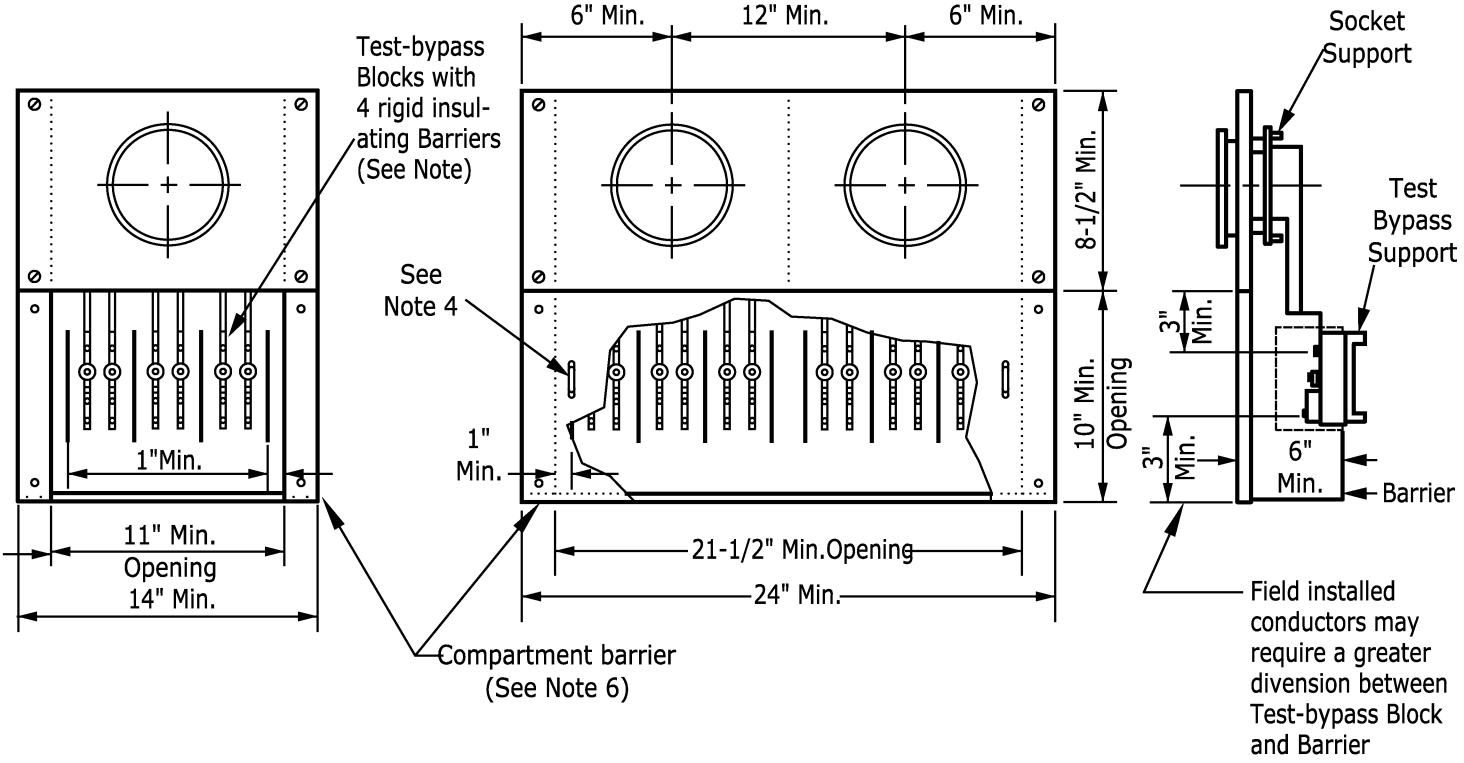

NOTES:

1. Test-bypass blocks with rigid insulating barriers shall be furnished, installed, and wired or bussed to the meter socket by the manufacturer. Connection sequence is line-load from left to right.

2. Metered conductors shall not pass through adjacent metering compartments except in enclosed wireways. To insure proper identification of cables in factory cabled equipment, metered cables (except in the test-bypass area), shall be either physically barriered or bundled so as to separate them from unmetered cable or permanently marked and isolated from unmetered cables. Physical barriers will not be required if the unmetered conductors are bus.

3. Meter panels shall be removable with a maximum of two meters per panel. Breakers must be sealable in the off position with a TEP or Service Provider seal, or individual breakers must have individual sealable covers.

4. Test- bypass block cover panel shall be sealable and fitted with a lifting handle. All panels exceeding 16" in width shall require two lifting handles.

5. When a neutral is required for metering or testing, an insulated neutral terminal shall be provided behind each test-bypass cover panel. The terminal shall be readily accessible when the cover panel is removed and shall be individually connected to the neutral bus with a minimum size No. 8 copper wire.

USE: For self-contained metering single and three phase, four wire services maximum capacity 200 amperes 0-600 volts

6. Factory installed full width insulating barrier with a maximum deflection of 1/2" from an applied force of 25 pounds downward, shall be located at the bottom of each test by-pass compartment.

7. For 3Ø, 4 wire, connect 7th jaw to body of neutral lug with No. 12 min. copper wire, white in color.

8. For 3Ø, 240/120V, 4 wire delta, identify right-hand test-bypass block (2 poles) as power leg. Identification to be orange in color (NOT AVAILABLE FOR NEW SERVICE).

9. For 1Ø, 3 wire, provide two test-bypass blocks mounted in the outer positions, and a four jaw socket.

10. For 1Ø, 3 wire, 120/208V, provide two test-bypass blocks mounted in the outer position and a 5 jaw socket. Connect 5th jaw to body of neutral lug with No. 12 min. copper wire, white in color.

11. Meter panels shall be removable but shall be non-removable when meter is in place. Meter socket is to be supported independent of and attached to meter panel.

12. Separate line and load conductors shall be installed by the contractor or manufacturer for each meter socket.

13. Each line and load position shall be clearly identified 3/4-inch minimum block letter labeling.

14. All securing screws shall be captive. All panels shall be sealable.

SAFETY SOCKET BOX and MAIN DISCONNET

(With Factory Installed Test-Bypass Facilities)

EUSERC Dwg. No's 304 & 305

USE:
1Ø 120/240V 3
100A & 200A
4 Terminal

Refer to SR-452 for the complete Approved Metering and Service Equipment list

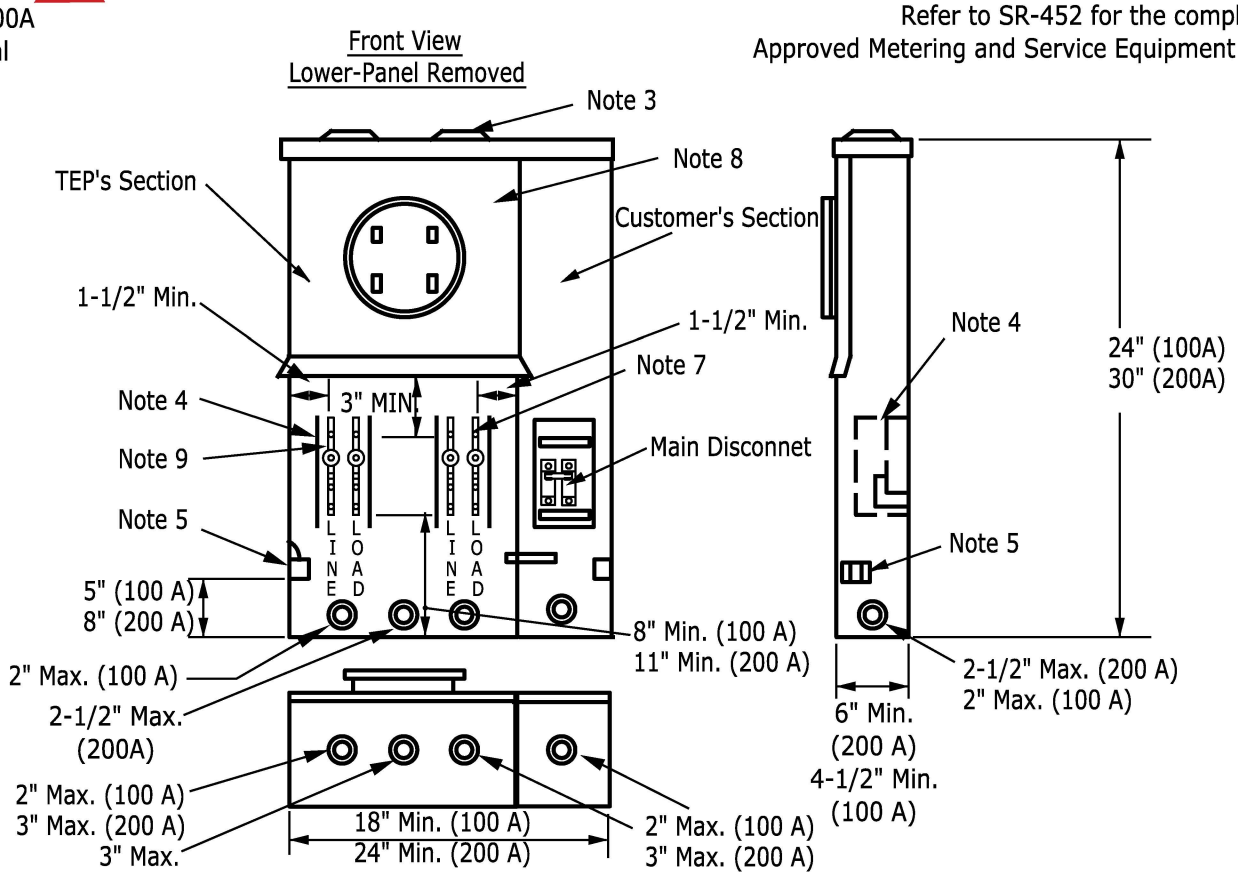

NOTES:

1. This device may be used for terminating/pulling and meter socket box for an underground service.
2. Aluminum bodied terminals for No. 6 through No. 1/0 AWG wire (100 A) or 1/0 AWG through 250 kcmil (200A).
3. Hubs capped off if used for underground feed.
4. Rigid insulating barriers.
5. Insulated bondable vertical lay-in, double neutral lug with No. 1/0 (100 A), No. 250 kcmil (200 A), AWG wire capacity mounted on either sidewall. Neutral lug shall be bonded to enclosure.
6. Test-bypass blocks shall be bussed or wired to socket jaws or terminals.
7. Upper test connector studs.
8. All section panels shall be independently removable. Upper panel shall be non-removable when meter is in place. Meter socket shall be mounted on support and attached to upper panel. Lower panel shall be sealable and permanently labeled: DO NOT BREAK SEALS, NO FUSES INSIDE."
9. Test-bypass block detail. See SR-410, page 3.
10. For 1ø, 3 wire, provide two test-bypass blocks mounted in the outer positions and a four jaw socket (Form 2 meter). 3
11. Permanent label on inside back of enclosure is 3/4" (min.) high block letters.
12. For switchboard application, refer to SR-410, page 6.
13. This socket is required for multi-metered commercial applications, SR-418.
14. Refer to SR-408, pages 1, 3 and 4 for socket requirements for permanently unoccupied commercial installations such as water wells, billboards, irrigation systems, etc., where a bypass system is not needed.
15. Minimum width of access opening shall be 11-1/2" for 100A, 13-1/2" for 200A socket.
16. When installing a safety socket for metering of street light installations or in parks, school yards and other areas subject to vandalism, install a protective cover (Meter Devices/Brooks Cat. #4042) on the meter base.

SAFETY SOCKET BOX and MAIN DISCONNET

(With Factory Installed Test-Bypass Facilities)

EUSERC Dwg.No's 304 & 305

USE:
1Ø, 208V, 277V, 480V, 240/480V 3
100A & 200A,
5 Terminal

Refer to SR-452 for the complete Approved Metering and Service Equipment list

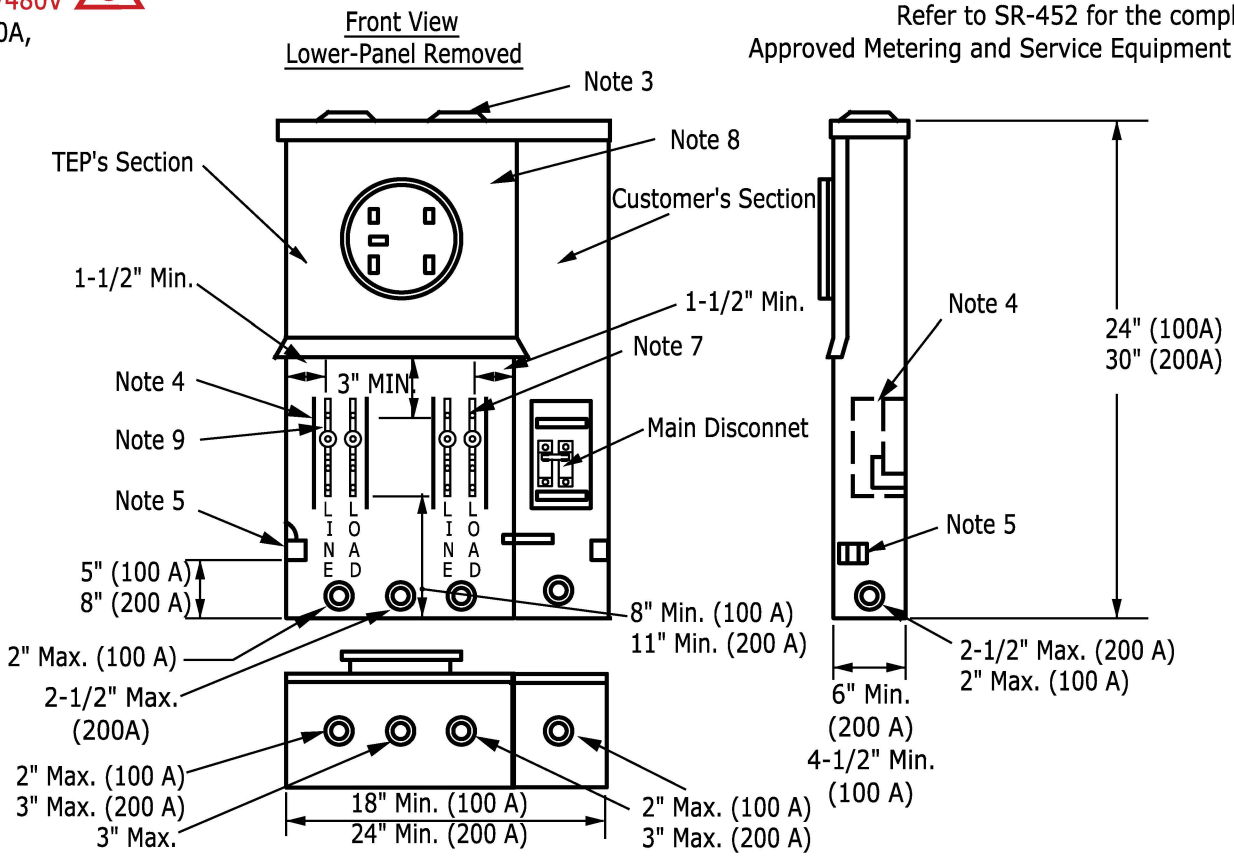

NOTES:

1. This device may be used for terminating/pulling and meter socket box for an underground service.
2. Aluminum bodied terminals for No. 6 through No. 1/0 AWG wire (100 A) or 1/0 AWG through 250 kcmil (200A).
3. Hubs capped off if used for underground feed.
4. Rigid insulating barriers.
5. Insulated bondable vertical lay-in, double neutral lug with No. 1/0 (100 A), No. 250 kcmil (200 A), AWG wire capacity mounted on either sidewall. Neutral lug shall be bonded to enclosure.
6. Test-bypass blocks shall be bussed or wired to socket jaws or terminals.
7. Upper test connector studs.
8. All section panels shall be independently removable. Upper panel shall be non-removable when meter is in place. Meter socket shall be mounted on support and attached to upper panel. Lower panel shall be sealable and permanently labeled: DO NOT BREAK SEALS, NO FUSES INSIDE."
9. Test-bypass block detail. See SR-410, page 3.
10. For 1Ø, 3 wire, 208V, 277V, 480V, or 240/480V, Form 12 meter, provide two test-bypass blocks mounted in the outer position and a five jaw socket. Connect 5th jaw of meter socket to body of neutral lug with #12 min. copper wire, white in color. The 5th jaw of the meter socket is to be securely attached to the meter socket. 3
11. Permanent label on inside back of enclosure is 3/4" (min.) high block letters.
12. For switchboard application, refer to SR-410, page 6.
13. This socket is required for multi-metered commercial applications, SR-418.
14. Refer to SR-408, pages 1, 3 and 4 for socket requirements for permanently unoccupied commercial installations such as water wells, billboards, irrigation systems, etc., where a bypass system is not needed.
15. Minimum width of access opening shall be 11-1/2" for 100A, 13-1/2" for 200A socket.
16. When installing a safety socket for metering of street light installations or in parks, school yards and other areas subject to vandalism, install a protective cover (Meter Devices/Brooks Cat. #4042) on the meter base.

SAFETY SOCKET BOX and MAIN DISCONNET

(With Factory Installed Test-Bypass Facilities)

EUSERC Dwg.No's 304 & 305

USE:
3Ø 120/208V/120/240V
277/480V, 240/480V
100A & 200A.
7 Terminal

Refer to SR-452 for the complete Approved Metering and Service Equipment list

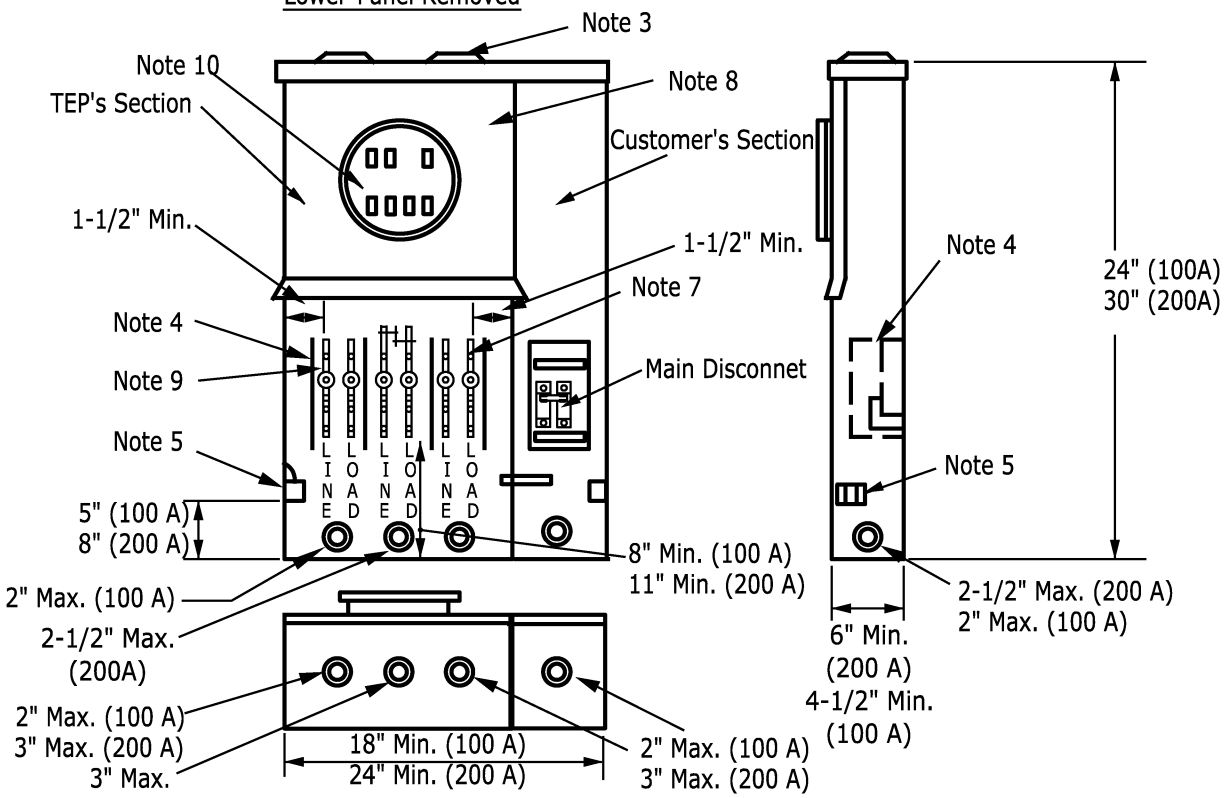

NOTES:

1. This device may be used for terminating/pulling and meter socket box for an underground service.
2. Aluminum bodied terminals for No. 6 through No. 1/0 AWG wire (100 A) or 1/0 AWG through 250 kcmil (200A).
3. Hubs capped off if used for underground feed.
4. Rigid insulating barriers.
5. Insulated bondable vertical lay-in, double neutral lug with No. 1/0 (100 A), No. 250 kcmil (200 A), AWG wire capacity mounted on either sidewall. Neutral lug shall be bonded to enclosure.
6. Test-bypass blocks shall be bussed or wired to socket jaws or terminals.
7. Upper test connector studs.
8. All section panels shall be independently removable. Upper panel shall be non-removable when meter is in place. Meter socket shall be mounted on support and attached to upper panel. Lower panel shall be sealable and permanently labeled: DO NOT BREAK SEALS, NO FUSES INSIDE."
9. Test-bypass block detail. See SR-410, page 3.
10. For 3ø, 4 wire, connect 7th jaw to body of neutral lug with #12 AWG copper wire, white in color (seven jaw socket).
11. For 3ø, 240/480V, 4 wire Delta, identify right hand side of the test-bypass block, line and load side (2 Poles) as the power leg (seven jaw socket).
12. Permanent label on inside back of enclosure is 3/4" (min.) high block letters.
13. For switchboard application, refer to SR-410, page 6.
14. This socket is required for multi-metered commercial applications, SR-418.
15. Refer to SR-408, pages 1, 3 and 4 for socket requirements for permanently unoccupied commercial installations such as water wells, billboards, irrigation systems, etc., where a bypass system is not needed.
16. Minimum width of access opening shall be 11-1/2" for 100A, 13-1/2" for 200A socket.
17. When installing a safety socket for metering of street light installations or in parks, school yards and other areas subject to vandalism, install a protective cover (Meter Devices/Brooks Cat. #4042) on the meter base.

USE: 1Ø Residential or
Commercial UG or OH
120/240 V, 201-400 A
Bypass capable

OVERHEAD or UNDERGROUND METER PANEL WITH BYPASS STUDS

EUSERC DWG. NO.302B

Refer to SR-452 for the complete
Approved Metering and Service Equipment list

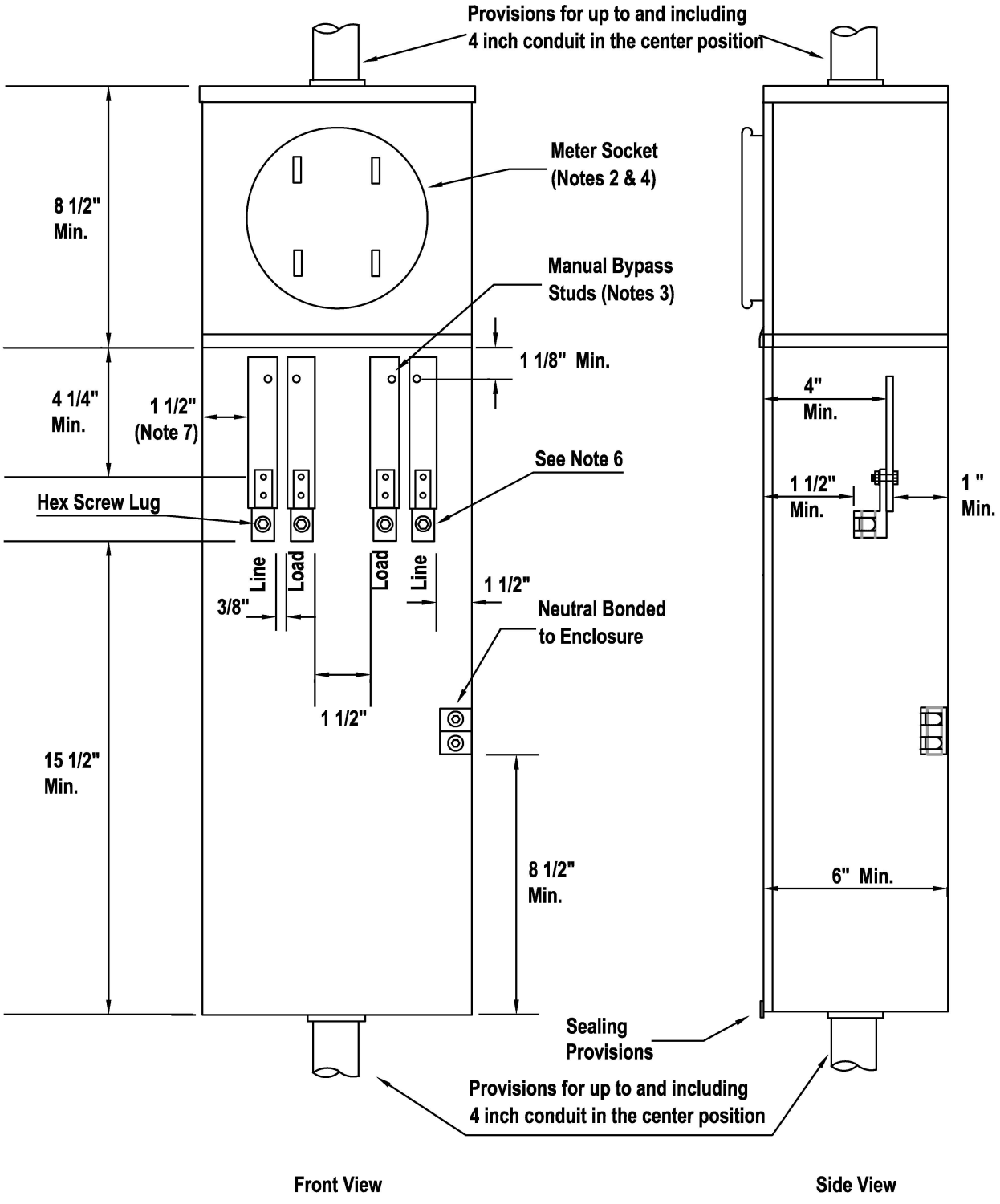

Tucson Electric Power / UniSourceEnergy Services SANTA CRUZ COUNTY	INITIATED BY	GC	REVISION NO.	12	SR-412 Pg. 1 of 4
	ESR COMM.	8-06	ESR COMM.	7-07	
			EFFECTIVE DATE	8-07	

Notes:

1. This service equipment shall be marked with continuous ampere rating of 320 amperes. Alternatively, it may be marked "400 AMP" (320 amperes continues).

2. Only ring type sockets are acceptable. For ring-type meter panels, the panel shall be provided with a sealing ring and the meter socket shall be rigidly mounted on a support and attached to the meter panel.

3. 12-24 bypass studs, 1/2 inch height with 1/2 inch hex-nut (measured across the flat) shall be provided on each phase bus section. The studs shall have a horizontal spacing of 1 1/2 inch (measured from the centers) between the line and load bus sections, and shall be offset from the line side termination lugs to permit cable entry from the top without interference with the utility provided manual bypass links.

4. The socket meter panel shall be provided with a sealing ring and shall not be removable with the meter in place.

5. The bypass / cable termination compartment cover panel shall be independent of the meter panel, removable, lockable and sealable.

6. Termination for service conductors shall be aluminum-bodied mechanical lugs with a range of No. 1 AWG through 350 KCMIL. The lugs shall be secured to assure vertical alignment and line side lugs shall be offset from the face of the bus to permit cable entry from the top. The line and load positions shall be identified in 3/4 inch high block letters.

7. 1 1/2 inch dimension may be less if insulating material provided.

8. If this panel is installed as an upgrade, please note that TEP will not splice underground service cable in order to terminate to the new panel. If additional cable length is required due to meter base changeouts the customer will be required to lower the meter socket to obtain sufficient length or provide a new service conduit system (including new service riser) to TEP equipment. If the current conductor meets TEP's design needs and is damaged, the replacement of the conductor will be billable. TEP will determine if the current service conductor is adequate for the service entrance amperage.

9. This panel is the replacement for the K-4U meter socket, this includes the K-4U all-in-one load centers. The K-4U (bolt in meter) style meter panel is no longer approved.

10. The customer is to provide the terminal connectors with a connector range of 1/0 AWG - 350 KCMIL are to be provided per the specifications stated in note 2, page 2 of SR-425.

11. Customer owned conductors shall not pass through the pull section or meter socket section.

UNDERGROUND COMBINATION METER AND DISTRIBUTION SECTION

USE: Commercial and Residential
120/240 V, 3 wire, 1Ø,
400A, 320A continuous
XK2 Meter

EUSERC DWG. NO. 302

Refer to SR-452 for the complete Approved Metering and Service Equipment list

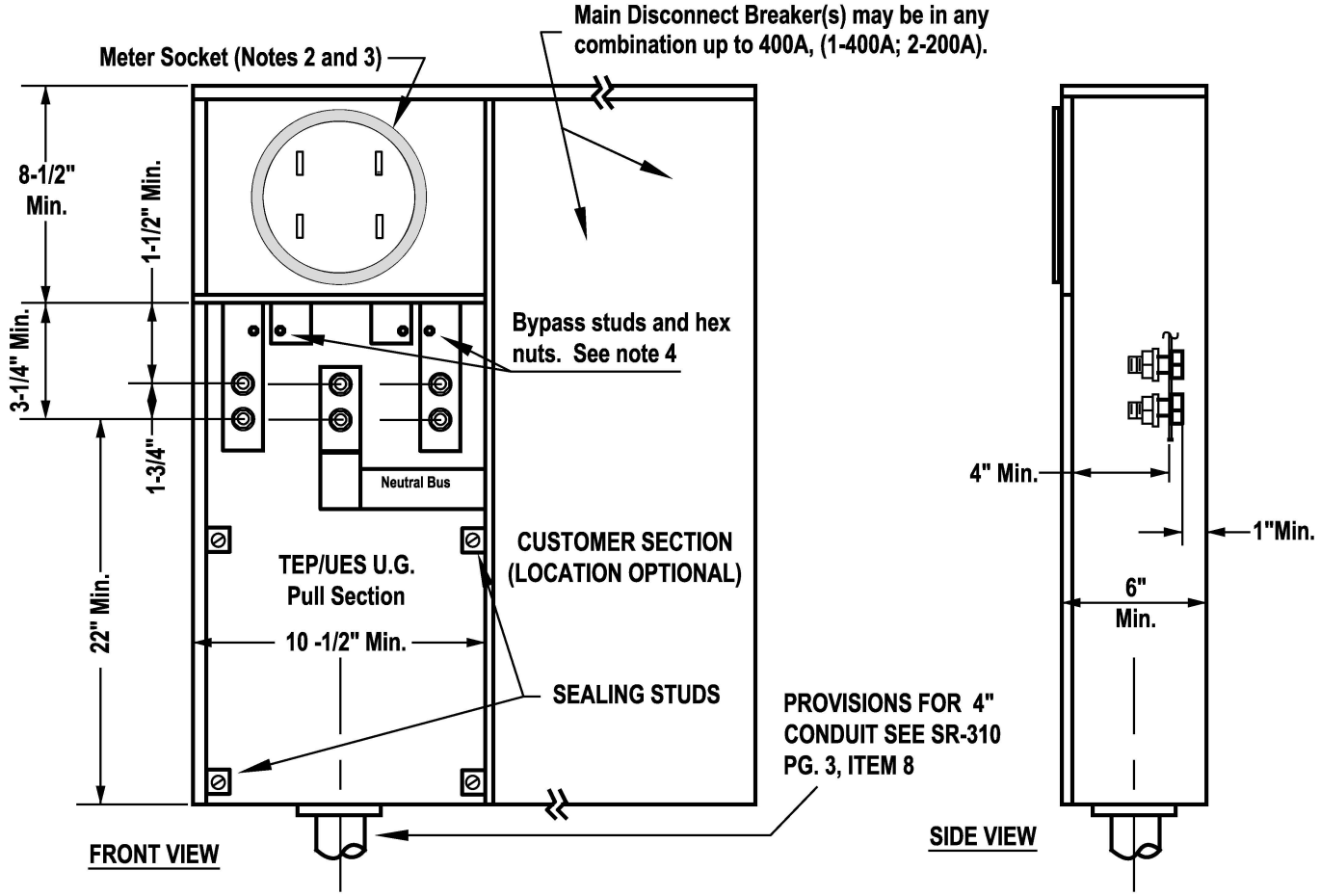

NOTES:

1. This service equipment shall be listed by an approved testing laboratory and marked with a continuous ampere rating of 320 amperes. Alternatively, it may be marked "400 amps" (320 amperes continuous)."
2. **Only ring type sockets are acceptable**. Ringed type socket cover panels shall be removable, sealable and rainproof.
3. The meter socket may be located above, to the left, or to the right of the underground pull section. A single unit with only service termination facilities and metering is also acceptable.
4. **Manual bypass facilities shall be provided for commercial service only, which will maintain service continuity to the customer while the meter is removed for test or inspection.**
5. Manual bypass provisions which de-energize the meter socket are preferred but not required. (**Automatic bypasses are unacceptable**.)
6. Customer-owned wiring extending from the distribution section (branch circuits) shall not pass through any section sealed by TEP/UES or Service Provider.
7. Pull section cover panels shall be removable, sealable, provided with two lifting handles, and limited to a maximum size of 9 square feet in area. Sealing provisions shall consist of two drilled stud and wing nut assemblies on opposite sides of the panels. All securing screws shall be captive.
8. Terminal connectors with a connector range of #1/0 AWG-350 KCMIL are to be provided as per the specifications stated in note #2, page 2 of SR-425.

UNDERGROUND COMBINATION METER AND DISTRIBUTION SECTION

USE: Residential and Unoccupied Commercial 120/240 V, 3 wire, 1Ø, 320A, continuous XK2 Meter

EUSERC DWG. NO. 302

Refer to SR-452 for the complete Approved Metering and Service Equipment list

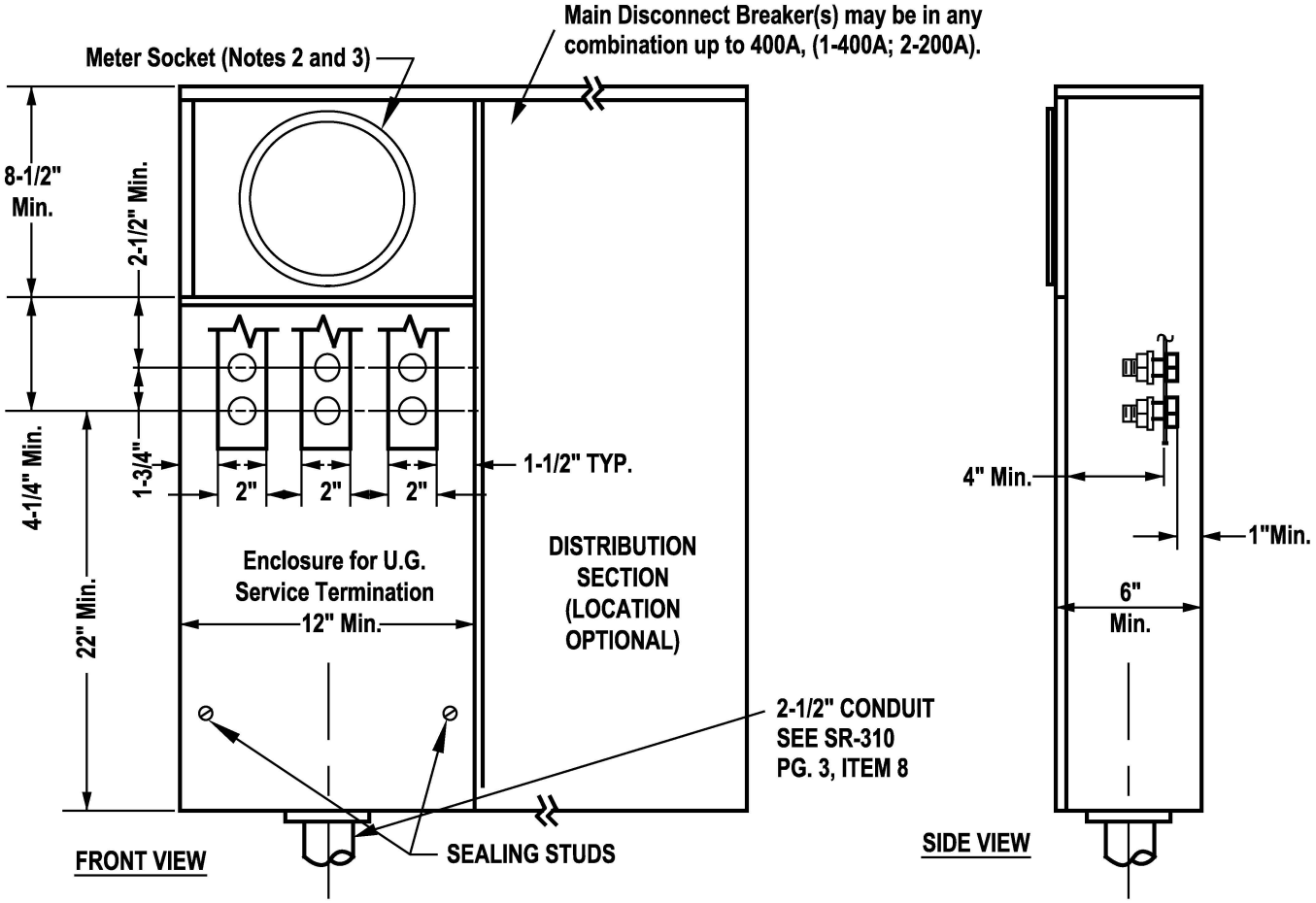

NOTES:

1. This service equipment shall be listed by an approved testing laboratory and marked with a continuous ampere rating of 320 amperes. Alternatively, it may be marked "400 amps" (320 amperes continuous)."
2. **Only ring type sockets are acceptable.** Ringed type socket cover panels shall be removable, sealable and rainproof.
3. The meter socket may be located above, to the left, or to the right of the underground pull section. A single unit with only service termination facilities and metering is also acceptable.
4. Customer-owned wiring extending from the distribution section (branch circuits) shall not pass through any section sealed by TEP/UES or Service Provider.
5. Pull section cover panels shall be removable, sealable, provided with two lifting handles, and limited to a maximum size of 9 square feet in area. Sealing provisions shall consist of two drilled stud and wing nut assemblies on opposite sides of the panels. All securing screws shall be captive.
6. Terminal connectors with a connector range of #1/0 AWG-350 KCMIL are to be provided as per the specifications stated in note #2, page 2 of SR-425.
7. See SR-412 pg. 1 or 3 for self contained metering on Occupied Commercial installations.

Formerly SR-412 pg. 3

Use: 120/240 V, 1Ø, 3-Wire
401 A & Larger.
Single-phase Primary
Metered Service.

SOCKET REQUIREMENTS

Single-Phase Instrument
Transformer Installations

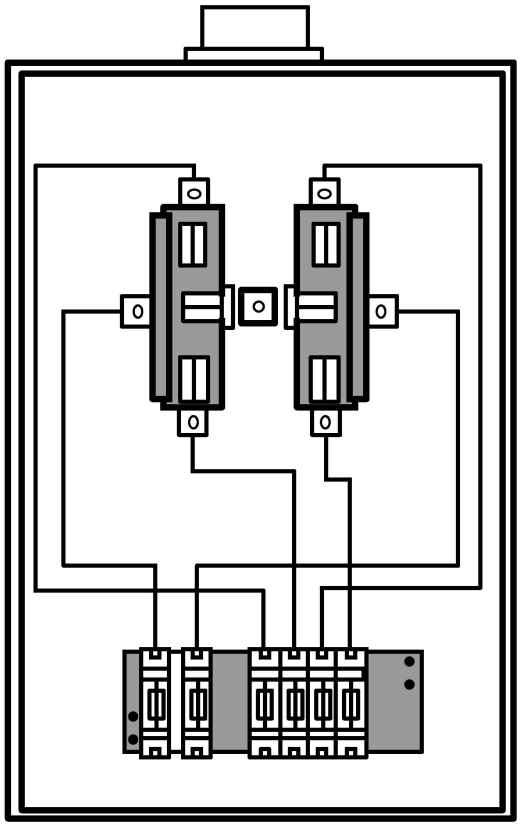

NOTES:

1. The customer shall provide and install an appropriate pre-wired socket as shown. Milbank Catalog No. UC7636-YL-TGE-DES (pre-wired).

2. Conduit for metering wire from the current transformers, (CT compartment), to the meter socket enclosure is provided by the customer and shall enter the meter socket enclosure at the hub or the precut knock-outs. Conduit shall not interfere with the operation of the test switch. **The metering conduit shall not have more than three 90° bends, or any combination of bends greater than 270º. The metering conduit shall not exceed 120 ft. in maximum length. Conduit must be minimum 2" diameter. A pull rope must be installed in conduit runs in excess of 50 ft. (Note: 1-1/4" conduit may be used if length is less than 50 ft and there is no more than one 90° bend).** Accessible and sealable pulling junctions must be approved by TEP Design Department and may not be modified as to void the UL listing of the equipment. The opening in the CT compartment shall be in front of, and not blocked by, the buss bars.

3. TEP or Service Provider will provide metering wire from current transformers to test switch.

4. See SR-422 series for typical installations.

5. Socket manufacturers may supply test switches other than Milbank if the switch arrangement is identical to Milbank.

6. Automatic circuit closing devices are not permitted in sockets used on TEP's system.

Use: With three phase instrument transformer installations of 201A & higher

SOCKET REQUIREMENTS
Three-Phase Instrument Transformer Installations

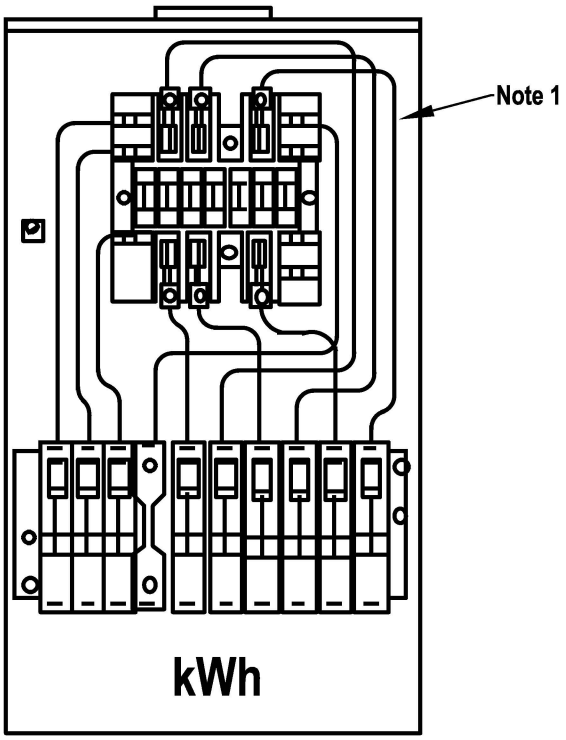

NOTES:

1. **The customer shall provide and install an appropriate pre-wired socket as described: KWH enclosure, (Milbank, 13 Terminal) Cat. No. UC7461-YL-TGE-DES (pre-wired).**

2. Conduit for metering wire from the current transformers, (CT compartment), to the meter socket enclosure is provided by the customer and shall enter the meter socket enclosure at the hub or the precut knock-outs. Conduit shall not interfere with the operation of the test switch. **The metering conduit shall not have more than three 90° bends, or any combination of bends no greater than 270°. The metering conduit shall not exceed 120 ft. in maximum length. Conduit must be minimum 2" diameter. A pull rope must be installed in conduit runs in excess of 50 ft. (Note:1-1/4 conduit may be used if length is less than 50 ft. and there is no more than one 90° bend).** Accessible and sealable pulling junctions must be approved by TEP Design Department and may not be modified as to void the UL listing of the equipment. The opening in the CT compartment shall be in front of, and not blocked by, the buss bars.

3. **TEP or Service Provider will provide metering wire from current transformers to test switch.**

4. **See SR-422 series for typical installations.**

5. **Socket manufacturers may supply test switches other than Milbank if the switch arrangement is identical to Milbank.**

6. **Automatic circuit closing devices are not permitted in sockets used on TEP's system.**

METERING INSTALLATION

Use: Typical commercial and residential multi-meter installations. Not intended for Temporary Service installations

Modified EUSERC DWG. G2

Refer to SR-452 for the complete Approved Metering and Service Equipment list

UNDERGROUND

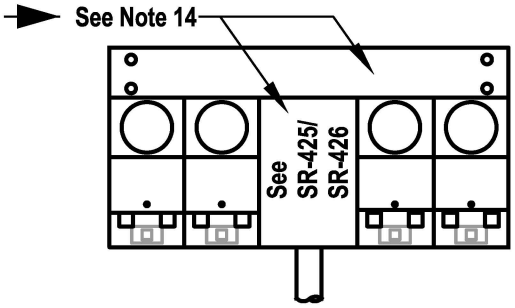

OVERHEAD

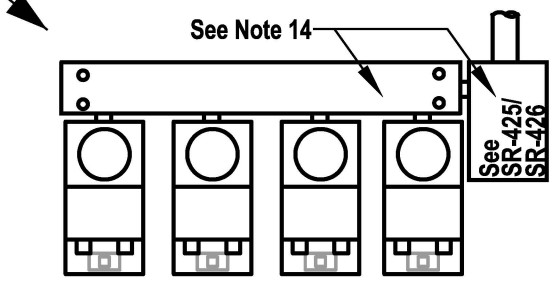

COMMERCIAL INSTALLATION

Refer to Note 7 for approval of alternate single-phase bypass systems. Refer to SR-410 for approved meter socket interiors and terminal assembly.

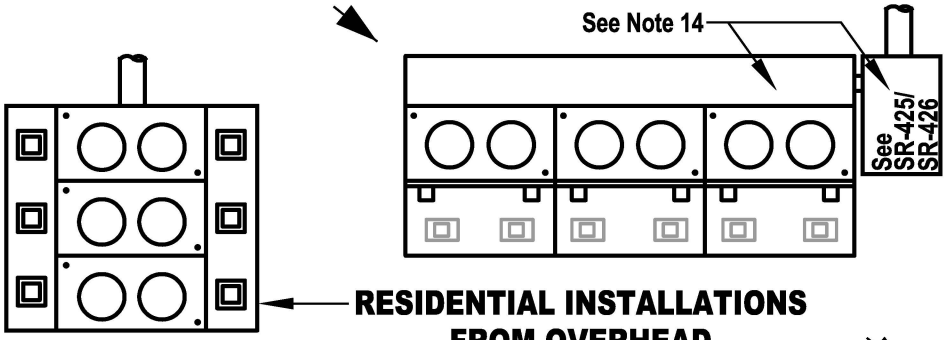

RESIDENTIAL INSTALLATIONS FROM OVERHEAD

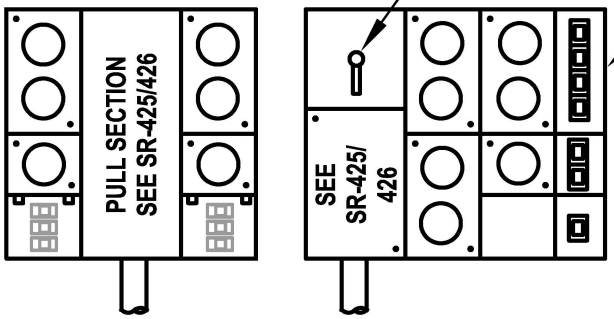

RESIDENTIAL FROM UNDERGROUND

Refer to SR-405, Pg. 9 for approved socket interiors. (Residential only)

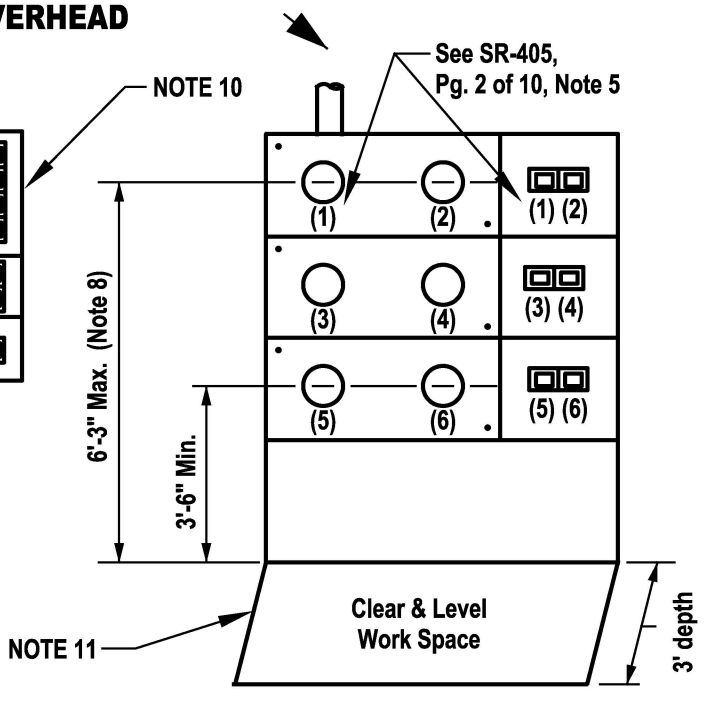

TYPICAL IDENTIFICATIONS

Tucson Electric Power / UniSourceEnergy Services SANTA CRUZ COUNTY	INITIATED BY	SC	REVISION NO.	13	SR-418 Pg. 1 of 2
	STANDARDS COMM.	6-78	ESR COMM.	5-13	
			EFFECTIVE DATE	6-13	

METERING INSTALLATION

1. Refer to SR-405, Pg. 2, Item 5, paragraph 2 for meter socket and meter switch identification.

2. Refer to SR-425 for dimensions of terminating pull sections.

3. Underground pull sections and landing lugs shall be under a separate sealable cover.

4. See local codes and ordinances for requirements for main disconnects. See SR-426, Pages 1 and 2 for TEP requirements.

5. Breakers must be sealable in the off position with TEP/UES or Service Provider padlock seal, or individual breakers must have individual sealable covers.

6. Not more than two meters shall be placed on one panel, unless all of the following specifications are met:
   (a) Cover panel can be removed without removing meters.
   (b) Only metered load conductors are accessible after the panel has been removed.
   (c) Each socket interior shall be barricaded from the other socket interiors.
   (d) Sockets must be ring-type.

7. The use of single-phase bypass systems other than the type described in SR-410 must be approved by TEP prior to installation of meter-paks. Submit a detailed drawing or a sample to the TEP's Meter Department, 4350 E. Irvington Road. It is recommended that equipment not be purchased prior to this approval.

8. For multi-meter installations only, the maximum height to the centerline of any meter shall be 6'-3" and the minimum height of the centerline of any meter shall be 3'-6" if the installation is outside. A minimum height of 2'-6" is permitted if the installation is in a meter room or lockable enclosure.
PLEASE NOTE that some 4 high and most 5 high meter modules will not fit within the permitted minimum and maximum heights for outside installations. Such modules will not be acceptable.

9. Sealing provisions must be designed to prevent cover removal without breaking seal or seals.

10. Breaker and wireway covers shall be independent of meter panels unless meter pak is designed per Note 6.

11. A clear and level work space at least 3' in depth and at least as wide as the electrical equipment shall be provided and maintained in front of all electrical equipment.

12. This service installation can not be used as a means of Temporary Service. Please refer to SR-307 or SR-314 for Temporary overhead and underground service installations.

13. Multi-meter services shall utilize a pull section, see SR-425 or SR-426.

14. Each meter socket connection shall have separate home run conductors to the termination can. No tapping of conductors will be allowed within the gutter section. Conductors shall be addressed and marked (taped) in accordance with SR-405.

EQUIPMENT ENCLOSURE CABINETS

USE: Protect utility equipment from vandalism

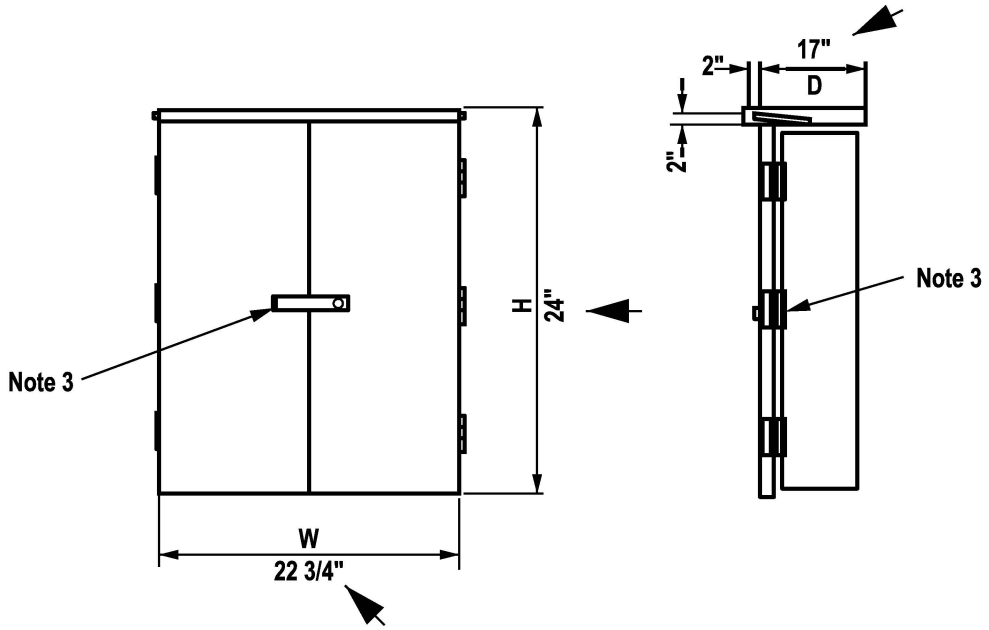

NOTES:

1. Customer shall install cabinet at the request of TEP/UES for protection of utility's equipment. For service meter panels installed in public ROW or common public areas, install per SR-409.

*2. Equipment enclosure cabinets shall be constructed of steel of not less than No. 16 MSG, protected against corrosion both inside and outside by Endurotex finish, or equal. They shall shed water, but are not required to be rain-tight.

3. Equipment enclosure cabinet doors shall be hinged and provided with a latching device that will accommodate a TEP/UES or Service Provider padlock. Hinges shall be on the sides so that maximum working space is available.

4. Not suitable for meter posts (SR-408, Pg. 5), safety socket box (SR-410, 480V installations). Consult the Design department for installation of these devices.

5. Stores number: 6-61-5002

* SUGGESTED MANUFACTURER:

T. A. Caid & Sons, General Sheet Metal,
2049 W. Highway Drive, Tucson, AZ 85705

USE: Current transformer installations not in switchgear, 0-600V single customer.

CURRENT TRANSFORMER INSTALLATIONS IN CABINETS

1. **Applicable Loads and Voltages:**
Cabinets with CT (Current Transformer) mounting bases may be used with service entrance sizes and voltages as follows:

   (a) 120/240 V, 1Ø, 3W, 401-800 A (2 CT's)
   (b) 240/120 V, 3Ø, 4W, Delta, 201-1200 A (3 CT's) (NOT for new service)
   (c) 208Y/120 V, 3Ø, 4W, Wye, 201-2000 A (3 CT's)
   (d) 480Y/277 V, 3Ø, 4W, Wye, 201-2000 A (3 CT's)

   Consult Design Services regarding proposed installations for any other load and voltage. See page 1.04 for service limitations.

2. **General Procedure:**
The customer provides and installs a CT cabinet containing a mounting base for the required number of CT's, line and/or load conductors required for the type service entrance utilized, the meter socket(s) and a conduit between the CT cabinet and the meter socket(s).

   The CT cabinet is for terminating line and load conductors, and installation of metering CT's. This is for the specific customer that requires transformer rated metering only and can not be utilized as a termination cabinet, or tapping point for other customers line conductors.

   Following the Service Provider's inspection and approval of the customer's installation, the Service Provider furnishes and installs the CT's, necessary metering conductors from the CT's to the meter socket(s), sets the meter(s) and connects the customer's service entrance equipment to the distribution system.

3. **Cabinet Requirements:**
A metallic cabinet complete with the required CT mounting base as described herein shall be furnished and installed by the customer. The cabinet shall be raintight and protected against corrosion on inside and outside surfaces.
Only CT cabinets approved by and meeting Service Provider's specifications may be installed.

   The CT mounting base shall be rated by the manufacturer for the maximum continuous load rating of the main switch(s) or breaker(s) in the service entrance. If the line side conductors enter the bottom of the cabinet, the load side conductors shall exit in the top or upper sides. If the line side conductors enter the top of the cabinet, the load side shall exit the bottom or lower sides. No conductors shall be allowed to pass through the center of the CT cabinet.

USE: CURRENT TRANSFORMER INSTALLATIONS NOT IN SWITCHGEAR, 0-600V

CURRENT TRANSFORMER INSTALLATIONS IN CABINETS

EUSERC DWG. No. 317
***(MODIFIED)** 318
328A
328B
329A
329B

FIGURE 1
401-800A, 1-PHASE, 3W
201-1200A, 3-PHASE, 4W
INSTALLATION (TYPICAL)

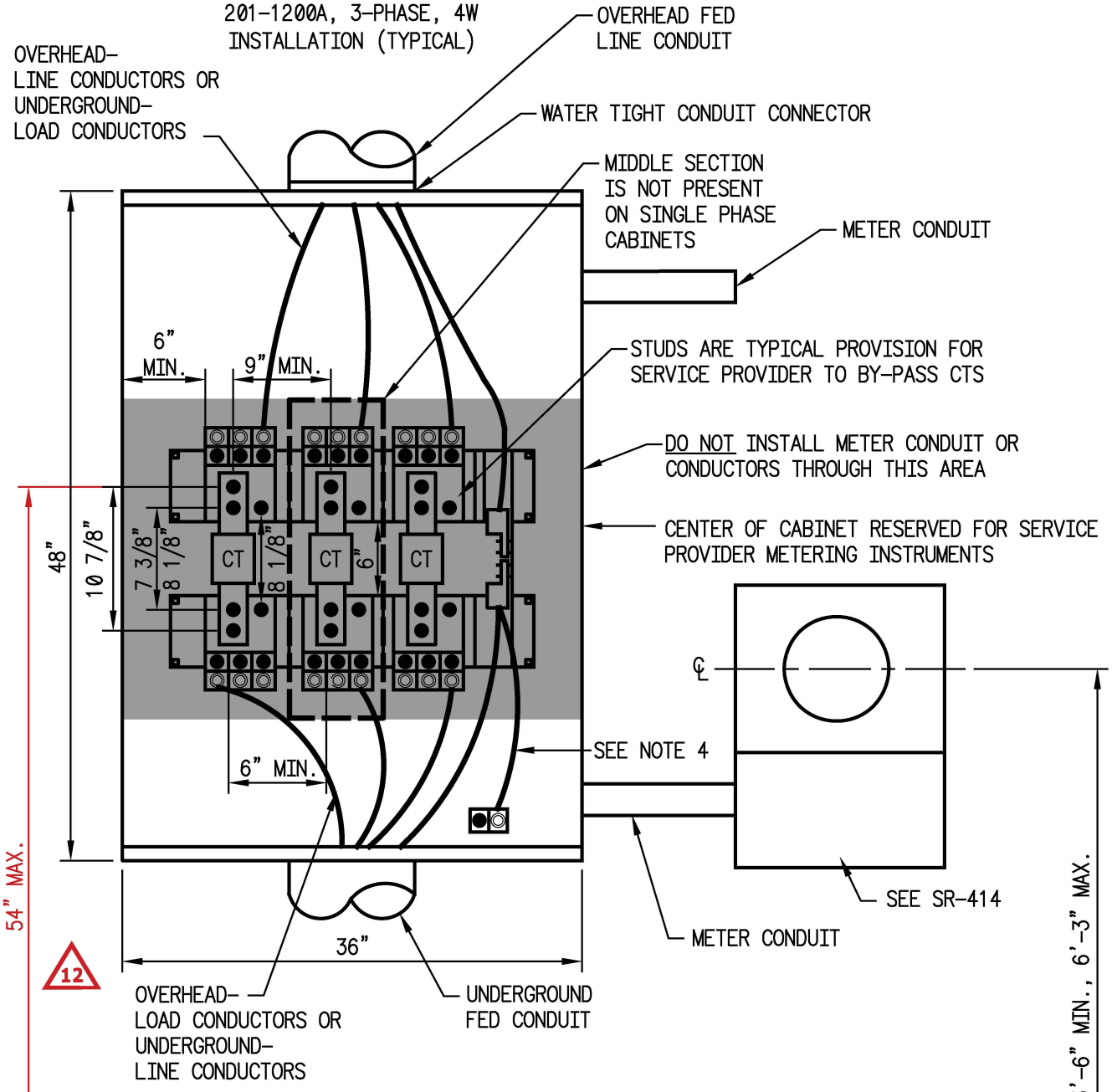

NOTES:

*ERICKSON CABINETS DIMENSIONS ARE DIFFERENT THAN EUSERC, BUT ARE APPROVED. SEE PAGE 5, ITEM 6 FOR THE APPROVED LIST.

ALL SERVICE AND METER CONDUIT SHALL BE IMC OR RMC.

USE: CURRENT TRANSFORMER INSTALLATIONS NOT IN SWITCHGEAR, 0-600V

CURRENT TRANSFORMER INSTALLATIONS IN CABINETS

EUSERC Dwg. No's 322
330

FIGURE 2
1201-2000A

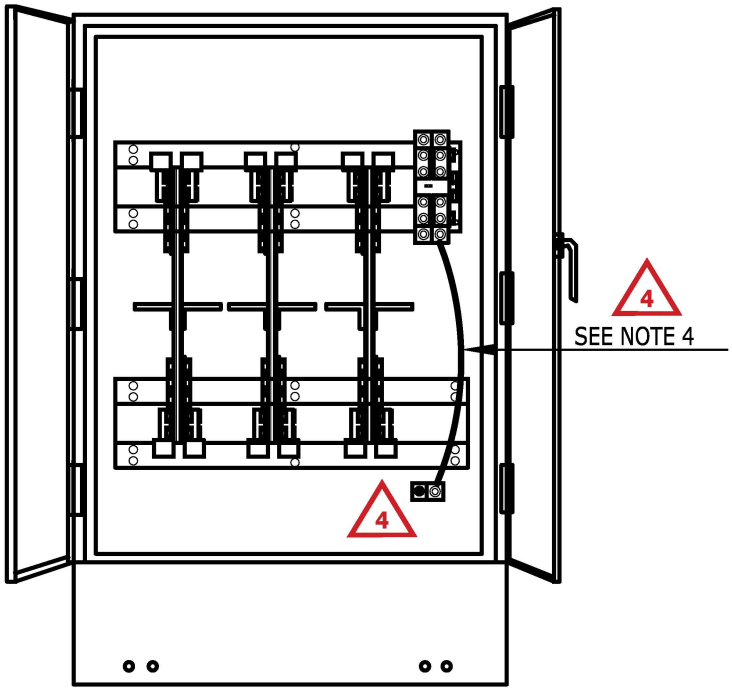

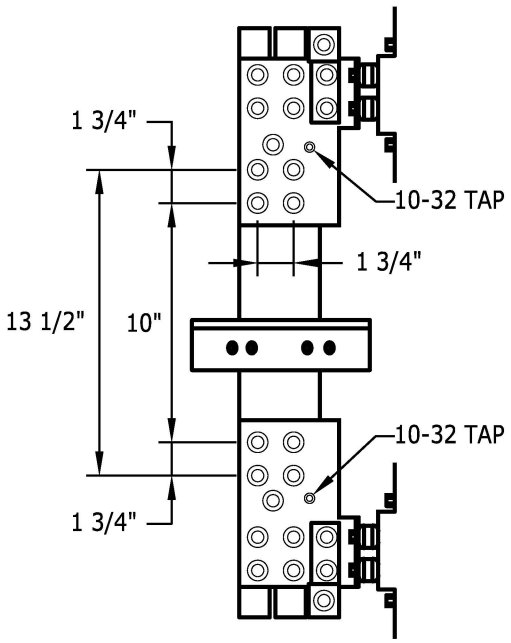

SECTION A-A

SEE SR-422, PAGE 2 OF 5, FOR FURTHER INSTALLATION NOTES 4

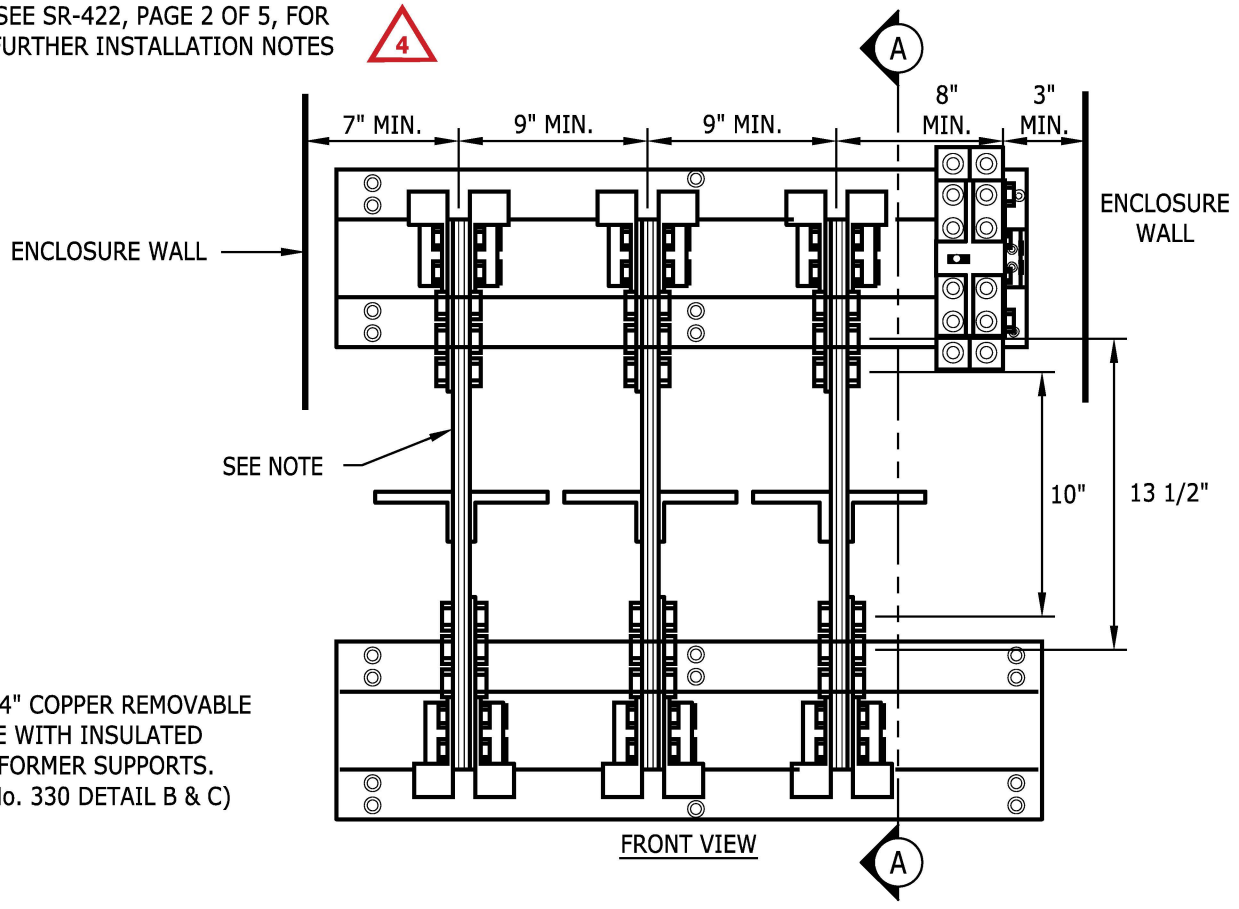

FRONT VIEW

NOTE:
PROVIDE 2 1/4"x4" COPPER REMOVABLE LINKS PER PHASE WITH INSULATED CURRENT TRANSFORMER SUPPORTS. (EUSERC DWG. No. 330 DETAIL B & C)

USE: Current transformer installations not in switchgear, 0-600V

CURRENT TRANSFORMER INSTALLATION IN CABINET

Figure 1

CTs are supported by their bars on four (4) mounting studs which are positioned in the bus on the mounting base with spacing exactly as shown. The CT mounting studs shall be a maximum of 1/2 inch diameter and a minimum of 3/8 inch diameter. Flat washers, pressure-maintaining spring washers and nuts as required shall be furnished by the customer.

CT mounting studs shall be firmly affixed to the bus on the mounting base so that they will not turn, back out or loosen when subjected to torques approved by UL for tightening or loosening of nuts on bolts of that size (including cross-threaded situations). The studs shall be fully threaded, except for the portion within 3/8 inch of the bus on the mounting base, and they shall be long enough to be threaded completely through the nut when a CT with a bar 1/2 inch thick is mounted with washers.

A provision to connect a bypass capable of carrying the full rated load of the service entrance shall be provided for each CT position on the mounting base.

Figure 2

Bus anchorage shall be such that busses will remain in position when removable copper links are out. Bus corners should be rounded as necessary to prevent damage to insulation. Bus insulation is to be adequate for the voltage involved. The maximum permissible bus unit shall consist of four 1/4"x4" bars spaced 1/4 inch.

Figures 1 and 2

Cabinet covers shall be provided with a means of sealing consisting of two drilled studs and wing nut assemblies on opposite sides. All securing screws shall be captive. If the cabinet cover is not hinged, two lifting handles shall be provided on any cover having a surface area of four or more square feet. Hinged doors may be provided with a latching device that will accommodate a Company padlock.

4. Cabinet Installation

The location of the cabinet shall conform to the requirements of SR-405.

The neutral connector shall be bonded to the CT cabinet.

(a) Overhead Single or Three-Phase Service

The point of delivery shall be at the point of attachment for the overhead service. Connectors are furnished and installed by the Service Provider. The customer's conductors between the point of delivery of the service and the CT cabinet shall pass through no other equipment. The "neutral" (and the "power leg", if delta-connected 240/120V service is furnished) shall be identified per the National Electrical Code. If conductors are parallel, they shall be grouped and identified at the point of delivery. If more than one raceway of magnetic metal conduit is used for parallel conductors, one conductor from each phase, plus one neutral conductor, must pass through each conduit.

(b) Underground Single-Phase Service

The point of delivery shall be at the junction of the Company's service conductors and the customer's connectors at the bottom of the current transformer mounting base. These connectors shall accommodate 750kcmil concentric stranded conductor and shall be suitable for terminating copper or aluminum. They shall have two 1/2 inch holes per tang, or be of a design that will prevent them from turning on the bus. Double barrel connectors and two service ducts required if paralleled service cables are specified by Design Services.

Four (4)inch Intermediate Metal Conduit (IMC) or Rigid Metal Conduit (RMC) shall be furnished and installed by the customer from the riser pole, or from the pad-mount transformer to the current transformer cabinet. The distance from the bottom of the cabinet to the bottom of the connectors on the lower portion of the CT mounting base shall be at least 16 inches. The space between the CT mounting base and the riser pipe entering the bottom of the cabinet is required by the Service Provider for installation and termination of service conductors. It shall be kept clear of customer's conductors or other obstructions.

(c) Underground Three-Phase Service

The point of delivery shall be at a secondary junction box or at a pad-mount transformer or at some other point as may be designated by Design Services. The customer's conductors between the point of delivery of the service and the CT cabinet shall pass through no other equipment. The "neutral" (and the "power leg" if delta-connected 240/120V service is furnished) shall be identified per the National Electrical Code. All service conductors shall be marked (taped) in accordance with SR-405 Note 16. If conductors are parallel, they shall be grouped and identified at the point of delivery. If more than one raceway of magnetic metal conduit is used for parallel conductors, one conductor from each phase plus one neutral conductor must pass through each conduit. The neutral of each set of service conductors must be identified with an address tag at the transformer or junction box location. Example; Dymo Aluminum embossing tape or other approved methods. **Customer conductors that connect to Service Provider equipment shall be no greater than 500kcmil**.

5. Metering Conduit and Meter Socket Installation

The metering conduit shall be installed by the customer between the CT cabinet and the kWh meter socket in accordance with SR-414. It shall be constructed of intermediate metal or rigid metal conduit and fittings. The meter socket(s) shall be installed by the customer in accordance with the requirements of SR-400 Service Requirements, and located as close to the CT cabinet as is reasonable. The customer must furnish and install a meter enclosure cabinet per SR-420 if the meters are located in a park, schoolyard, or other area subject to vandalism or for meter totalizing.

6. Line and Load Conductor Conduit

Conduit entering and exiting the CT cabinet for line and load conductors shall be IMC or RMC.

7. Approved Manufacturers of CT Cabinets:

Erickson Electrical Equipment Co.
475 Bonnie Lane
Elk Grove Village, Illinois 60630
1-800-952-7225
Figure 1 Cat. 1076-1 (1Ø 800A)
Cat. 1076-2 (3Ø 1200A)
Figure 2 Cat. CT124TEP (3Ø 1200A)
Cat. CT164-TEP (3Ø 1600A)
Cat. CT204-TEP (3Ø 2000A)

Sun Valley Electric Mfg.
1334 N. 21st Ave.
Phoenix, Arizona
1-800-818-6960
Figure 1 Cat. SVCT1200-1 (1Ø 800A)
Cat. SVCT1200-4 (3Ø 1200A)

USE: Metering single customer on pad-mount primary metered equipment using CT's & PT's.

METER SOCKET AND CONDUIT INSTALLATION DETAIL FOR PRIMARY METERED SERVICE IN A PAD-MOUNT 200A OR LESS

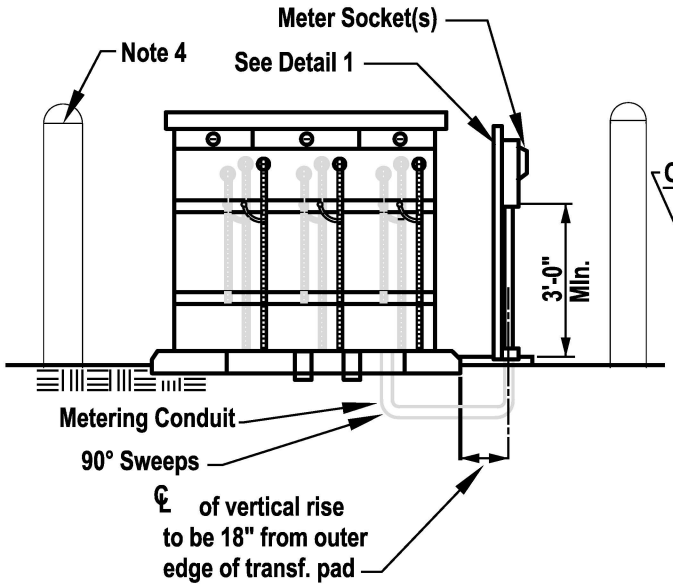

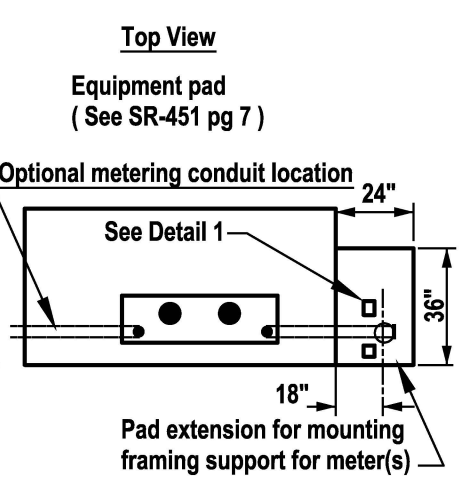

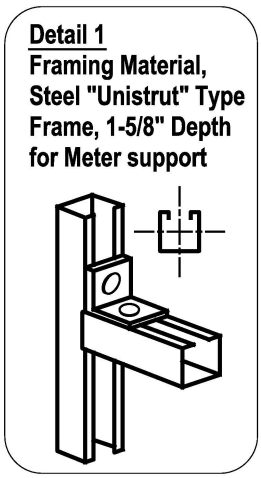

NOTES:

1. Applicable Voltage and Loads - 13.8 kv three phase, four wire grounded wye. 200 amperes or less. Consult the area Designer for the specific applicability.

2. General Procedure - The point of delivery is at the CT's, furnished by the company. The customer provides and installs the equipment pad, terminating UG primary cable (customer owned), metering conduit, meter socket and equipment protection (if required). The company installs the CT's / PT's (current and potential transformers) mounted within the cabinet, wires the metering conductors and sets the meter. The company attaches the load-break elbow to the CT's.

3. Metering Conduit and Meter Socket Installation - Installation of the metering conduit and meter socket(s) shall meet the requirements of SR-414. The metering conduit (min. 1-1/4") shall be Schedule 40 PVC (or Schedule 80 PVC) from primary metering cabinet opening to the buried portion of the conduit. The above-grade portion must be rigid or intermediate steel conduit. All PVC shall be rated 90 C operation. The riser primary metering compartment shall extend 2" above the top of the concrete pad and the open end of theis conduit shall be sealed to prevent entry of debris prior to installation of metering conductors. Any metering conduit extending more than two feet outside the concrete pad shall be 18" below final grade and be covered with 4" of concrete. If the metering conduit is ever dug up or damaged, it shall be the customer's responsibility to replace it according to company specifications.

   The meter socket must be mounted securely on a supporting frame, constructed of rigid steel framing material, "Unistrut" type that is set in concrete adjacent to and adjoining the equipment pad. The customer must furnish and install a meter enclosure cabinet per SR-420 if the meter(s) are located in a park, schoolyard, or other area subject to vandalism, or for meter totalizing.

4. Protection of Transformer and Metering Equipment from Traffic Hazards - Where transformer and metering equipment are exposed to vehicular traffic, approved traffic protection must be installed around the equipment. (See SR-230.)

DETAIL FOR PRIMARY METERED SERVICE IN A REMOTE METERING CABINET 201A - 800A

USE: Metering single customer on remote primary metered equipment using CT's & PT's.

EUSERC DWG. NO. 338

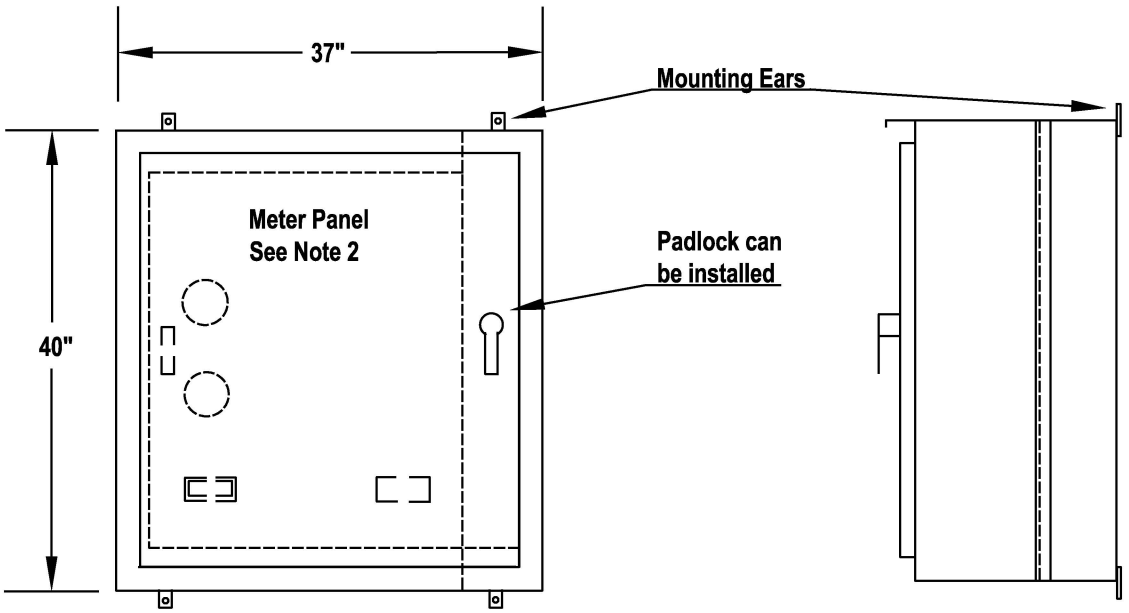

Front View

Side View

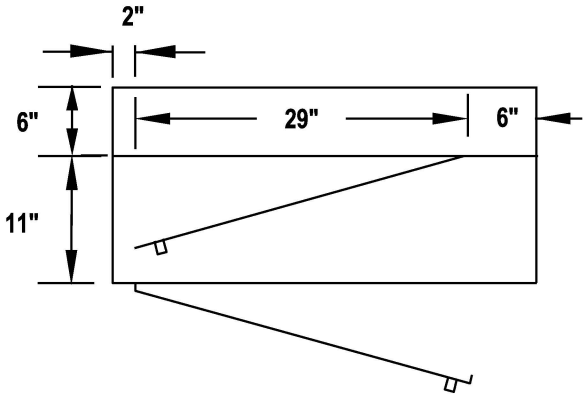

Top View

Notes:

1. Enclosure door shall be:

   a. Equipped with a device to secure the door in the open position at 90º or more.

   b. Secured in the closed position with a handle operated latching mechanism, and lockable with a padlock having a 5/16" lockshaft.

2. For meter panel requirements, see Drawing 333.

Tucson Electric Power / UniSourceEnergy Services SANTA CRUZ COUNTY	INITIATED BY	GC	REVISION NO.	0	SR-424 Pg. 1 of 2
			STANDARDS COMM.	7-06	
	ESRB COMM.	6-06	EFFECTIVE DATE	7-06	

DETAIL FOR PRIMARY METERED SERVICE IN A REMOTE METERING CABINET 201A - 800A

General Notes

1. A separate metering enclosure shall be installed near the Primary Dead End structure, underground equipment cabinet, or as indicated on the TEP Construction drawing.
2. Conduit for the metering wiring from the current and potential transformers (Junction Box/Safety Switch to the meter enclosure) shall enter the meter enclosure through the bottom and shall be installed behind the hinged meter panel. Conduit shall not interfere with the operation of the test switches or the hinged meter panel. The metering conduit shall not have more than three 90 degree bends or sweeps and shall not exceed 120ft in maximum length for lengths up to 90ft, conduit must be a minimum of 1 1/4" in diameter, and for lengths over 90ft up to 120ft conduit must be a minimum of 2" in diameter. A pull wire must be installed in conduit. Accessible and sealable pulling junctions are allowable if needed.
3. A CT junction box(es) rated NEMA 4X enclosures sized 12"x12"x6" with a back panel shall be installed near the instrument transformers. The junction box for the CT's shall be installed on the steel structure that the CT's are mounted. Conduit from the CT's shall run to the junction box and from the junction box to the metering enclosure. The enclosures shall have a latching system that will allow padlocking and the installation of metering seals. Each enclosure shall have a stainless steel identification plate mechanically fastened to the door. The plate shall have one line of text. Line 1 shall read "TEP METERING" in block lettering.
4. A three-phase safety switch shall be installed on the 120V side (secondary) of each set (3) of PT's. The safety switch shall have a ground bus included for connection of the X2 connections. Conduit from the PT's shall run to the safety switch and from the safety switch to the metering enclosure.

Safety Switch Specification for PT secondary

Square D Heavy Duty Safety Switch, 240V, fusible, Cat #H221DS (30A, 2 wire - 2 blades and fuseholders, NEMA 4, 304 Stainless Steel) or Cat #H321DS (30A, 3 wire - 3 blades and fuseholders, NEMA 4, 304 Stainless Steel). With a Neutral Assembly Cat #SN03 and a ground kit Cat #GTK03.

Safety Switch watertight hubs (one for the top and/or one for the bottom) for the conduit size required:

Conduit Size	Cat #
1/2"	H050
3/4"	HO75
1"	H100
1 1/4"	H125

5. New metering enclosures and equipment shall be installed as per TEP standard SR-431, and SR-430. The metering enclosure shall be constructed as per SR-438 (Figure 2, EUSERC DWG 333) and EUSERC DWG 338. Enclosure to contain two (2) form 9S meter sockets, two (2) Removable "I" Plates and two (2) test switches. Test switches shall be Milbank Cat # TS10-0016 and cover Milbank Cat # K3388-BLK-FL as per TEP standards SR-430 note 5 or exact equivalent must be provided. Meter sockets shall be 13 terminal sockets. The door of the enclosure shall have a three point padlockable door latch mechanism to hold the door closed and to lock it closed. The enclosure will have four (4) 4" tabs welded to the enclosure for mounting purposes. The tabs will be welded to the outside back of the enclosure. Two (2) tabs will be mounted at the top and two (2) mounted to the bottom of the enclosure. Enclosure shall have a stainless steel identification plate mechanically fastened to the door. The plate shall have one line of text. Line 1 shall read "TEP METERING" in 2" tall block lettering.
6. A conduit shall be installed between all metering panel enclosures to allow for meter communications wiring. The minimum conduit size shall be 1".
7. A dedicated telephone circuit shall be provided for TEP metering usage. The telephone wiring shall be installed in a minimum conduit size of 1" to the metering panel enclosure. Cat 3 cable shall be used for the telephone circuit.
8. All raceway installations shall be made with rigid steel conduit. For underground installations the raceway shall be rigid steel PVC coated conduit.
9. Customer shall provide a dedicated phone circuit to be utilized by TEP Metering to allow communications with the Metering Equipment.

USE: Terminate service to muiltimetered installations, 1Ø OR 3Ø

TERMINATING BOX OR SECTION

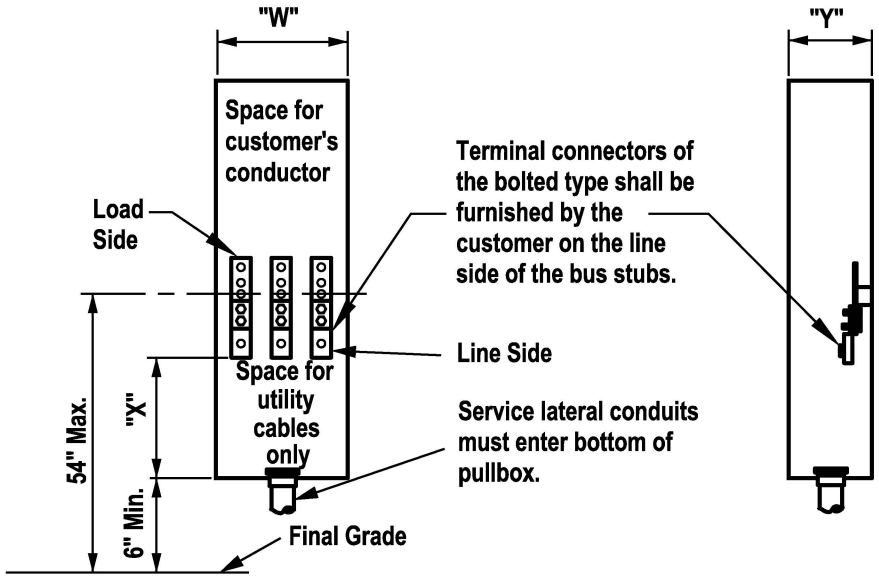

MULTIPLE OCCUPANCY RESIDENTIAL UNITS

Ampacity Meter Sockets	Entrance Ampacity	Connector Range	Min. W	X	Dim. Y	Conduit Size
100-125						
2 thru 3	200 A	*1/0 AWG-250 kcmil	7"	11"	4.5"	2-1/2" (Note 4)
4 thru 10	400-800 A	*1/0 AWG-350 kcmil	7"	11"	4.5"	2-1/2" (Note 4)
Over 10	Consult Design, Service Requirements & Service Delivery Dept. - See TEP					
	Construction Drawings					
For 750 kcmil Service Laterals		**350 kcmil-750 kcmil	10"	16"	6"	4" (Note 4)
200 A						
2 thru 3	400 A	*1/0 AWG-350 kcmil	7"	11"	4.5"	2-1/2" (Note 4)
Over 3	Consult Design, Service Requirements & Service Delivery Dept.- See TEP					
	Construction Drawings					

MULTIPLE OCCUPANCY COMMERCIAL UNITS

Ampacity Meter Sockets	Entrance Ampacity	Connector Range	Min. W	X	Dim. Y	Conduit Size
100-125						
2 thru 3	200-300 A	*1/0 AWG-350 kcmil	7"	11"	4.5"	2-1/2" (Note 4)
4 thru 6	400-600 A	**350 kcmil-750 kcmil	10"	16"	6"	4" (Note 4)
200 A						
2 thru 4	400-600 A	**350 kcmil-750 kcmil	10"	16"	6"	4" (Note 4)

TERMINATING BOX OR SECTION

* Lay-in type connectors permitted in this size. ** Connectors for 750 kcmil conductor shall have two 1/2" holes per tang, or be of a design that will prevent them from turning on bus stub. Double barrel connectors and two service ducts required if paralleled service cables are specified by Design, Service Requirements & Service Delivery Dept. + Neutral connector shall be bonded to the enclosure.

NOTES:

1. The pull section cover shall be independent of any service equipment other than the pull section. Provision for sealing shall be made near opposite corners of the cover. The securing screws shall be captive, and lifting handles shall be provided if the cover is more than 4.0 square feet in area.

2. The terminal connectors on the line side shall be of proper material and size to accommodate copper or aluminum conductors as specified on TEP construction drawing. All service conductors shall be marked (taped) in accordance with SR-405 Note 16. Except where lay-in type connectors are permitted, the terminal connectors shall be removable to facilitate cable installation. The bolts used to secure the terminal connectors to the bus stubs shall be 3/8" minimum diameter and shall be firmly affixed to the bus stubs in such a manner that they will not turn, back out, or loosen when subjected to normal UL approved torques for that size bolt during tightening or loosening of terminal nuts (including cross-threaded situations). The mechanical connectors shall be attached to the bus stubs, using flat washers, pressure maintaining spring washers and nuts, and the bolts shall be long enough to be threaded completely through the nuts. All parts must be plated to prevent corrosion.

3. Bus stubs shall be anchored to prevent turning. A minimum radial clearance of 1-1/2" shall be provided between hot bus terminals and grounded or neutral surfaces.

4. If the conduit size required is 2-1/2"(CIC installation), customer must install rigid or intermediate steel conduit with a 45° sweep into the service trench, as shown in SR-310, to accommodate service cable-in-conduit which will be installed by TEP.

If the design requires a 2-1/2" or 4" duct system, the customer must install a continuous duct system, in accordance with SR-205, from the terminating box to the point on TEP's system specified by Design, Service Requirements & Service Delivery Department. The conduit riser to the terminating box shall be rigid or intermediate steel conduit, even if the box is enclosed within a structure. The riser shall have a 36" radius at the 90° sweep and be securely fastened so that no movement will occur under the stresses to which it will be subjected when TEP pulls in the service conductors. Schedule 80 PVC is not acceptable.

All continuous duct runs, regardless of size, are to have a 90° sweep with a 36" radius at the service riser and are not to exceed 270° for a total of all deflections.

5. See TEP construction drawing for required conduit size.

USE: Terminate underground service to multimetered installations, 1Ø or 3Ø.

COMBINATION TERMINATING BOX AND MAIN DISCONNECT

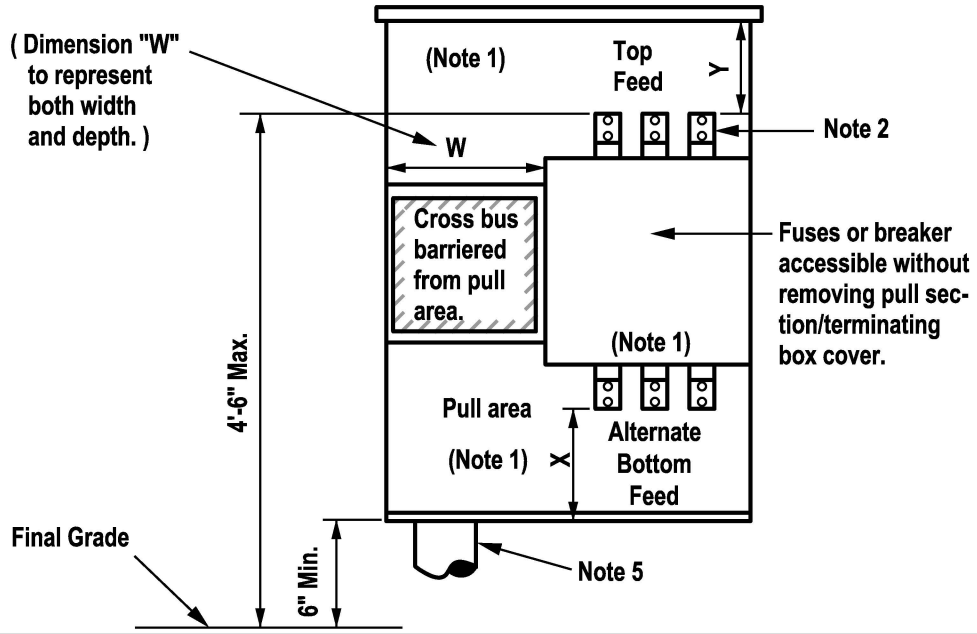

MULTIPLE OCCUPANCY RESIDENTIAL UNITS

Ampacity Meter Sockets	Entrance Ampacity	Connector Range	Min. W	X	Dim. Y	Conduit Size
100-125 A						
2 thru 3	200 A	*1/0 AWG-250 kcmil	4.5"	11"	6"	2-1/2" (Note 4)
4 thru 10	400-800 A	*1/0 AWG-350 kcmil	4.5"	11"	6"	2-1/2" (Note 4)
Over 10	Consult Design, Service Requirements & Service Delivery Dept. See TEP Const. Drawing					
For 750 kcmil Service Laterals		**350 kcmil-750 kcmil	6"	16"	8"	4" (Note 4)
200 A						
2 thru 3	400 A	*1/0 AWG-350 kcmil	7"	11"	4.5"	2-1/2" (Note 4)
Over 3	Consult Design, Service Requirements & Service Delivery Dept. See TEP Const. Drawing					

MULTIPLE OCCUPANCY COMMERCIAL UNITS

Ampacity Meter Sockets	Entrance Ampacity	Connector Range	Min. W	X	Dim. Y	Conduit Size
100-125 A						
2 thru 3	200-300 A	*1/0 AWG-350 kcmil	4.5"	11"	6"	2-1/2" (Note 4)
4 thru 6	400-600 A	**350 kcmil-750 kcmil	6"	16"	8"	4" (Note 4)
200 A						
2 thru 4	400-600 A	**350 kcmil-750 kcmil	6"	16"	8"	4" (Note 4)

COMBINATION TERMINATING BOX AND MAIN DISCONNECT

* Lay-in type connectors permitted in this size.
** Double barrel connectors and two service ducts required if paralleled service cables are specified by Design, Service Requirements & Service Delivery Dept.
+ Neutral connector shall be bonded to the enclosure.

NOTES:

1. The pull section cover shall be independent of any service equipment other than the pull section, including the fuse or breaker access cover. Provision for sealing shall be made near opposite corners of the cover. The securing screws shall be captive, the cover shall be one piece, and lifting handles shall be provided if the cover is more than 4.0 square feet in area.

2. The terminal connectors on the line side shall be of proper material and size to accommodate copper or aluminum conductors as specified on TEP construction drawing and shall be located in sealable area. All service conductors shall be marked (taped) in accordance with SR-405 Note 16. If terminal connectors are removable to facilitate cable installation, the bolts used to secure them to the bus stubs shall be 3/8" minimum diameter and shall be firmly affixed to the bus stubs in such a manner that they will not turn, back out, or loosen when subjected to normal UL approved torques for that size bolt during tightening or loosening of terminal nuts (including cross-threaded situations). The mechanical connectors shall be attached to the bus stubs, using flat washers, pressure maintaining spring washers and nuts, and the bolts shall be long enough to be threaded completely through the nuts. All parts must be plated to prevent corrosion.

3. Bus stubs shall be anchored to prevent turning. A minimum radial clearance of 1-1/2" shall be provided between hot bus terminals and grounded or neutral surfaces.

4. Center conduit (front to rear) under pull area, not under fuse or breaker area. If the conduit size required is 2-1/2"(CIC installation), customer must install rigid or intermediate, steel conduit with a 45° sweep into the service trench, as shown in SR-310, to accommodate service cable-in-conduit which will be installed by TEP.

If the design requires a 2-1/2" or 4" duct system, the customer must install a continuous duct system, in accordance with SR-205, from the terminating box to the point on TEP's system specified by Design, Service Requirements & Service Delivery Department. The conduit riser to the terminating box shall be rigid or intermediate steel conduit, even if the box is enclosed within a structure. The riser shall have a 36" radius at the 90° sweep and be securely fastened so that no movement will occur under the stresses to which it will be subjected when TEP pulls in the service conductors. Schedule 80 PVC is not acceptable.

All continuous duct runs, regardless of size, are to have a 90° sweep with a 36" radius at the service riser and are not to exceed 270° for the total of all deflections.

5. See TEP construction drawing for required conduit size.

CURRENT TRANSFORMER INSTALLATIONS IN SWITCHGEAR

Use: Current transformer installations in switchgear, 0-600 V.

1. Applicable Loads and Voltages - Switchgear with a CT (current transformer) compartment may be used at all of the TEP's service voltages less than 600 V with service entrance ampacities as follows:

(a) 1Ø, 3W, 401-800 A (2 CT's)
(b) 3Ø, 4W, 201-3000 A (3 CT's)
(c) 3Ø, 4W, 3001 A and larger (3 CT's) (special engineering required)

2. General Procedure - The customer's switchgear shall contain a CT compartment which is for the exclusive use of TEP or Service Provider. If the switchgear is located in an accessible place outside of the building or in a meter room, the meter socket(s) and test switch may be installed on a panel in the CT compartment door. If switchgear is not located outside of the building or in a meter room (see SR-405, Page 6), the customer installs a continuous metering conduit (min. 2") from the CT compartment to the meter socket(s) (See SR-431). The meter socket(s) must be located outside of the building in an accessible space. Following the TEP's inspection and approval of the customer's installation, TEP or Service Provider provides and installs the CT's, the metering conductors and the meter(s).

3. CT Compartment Requirements - The size and specifications of the compartment shall meet the requirements of SR-432 through SR-439. Different sizes and specifications are required for certain ampacities of the service entrance. The CT compartment cover panels, any blank panels and the pull section cover shall be made sealable by using studs and wing nuts or captive sealing screws. The CT compartment must be barriered from all load bus or load conductors.

The bus structure in the CT compartment shall provide for mounting of the proper size and kind of CT's for the ampacity required. The customer shall furnish all bolts, nuts, flat washers and lock washers needed to mount the CT's. The CT bolts shall be maximum 1/2" and minimum 3/8" in diameter. They shall be fully threaded except for the portion within 3/8" of the bus and shall be long enough to be threaded completely through the nut when a CT with a bar 1/2" thick is mounted with flat and pressure maintaining spring washers.

4. Dual Locking Arrangement for Outdoor or Raintight-Type Switchgear - To facilitate TEP or Service Provider access to meters and/or the CT compartment, the customer shall provide a dual locking arrangement on the doors of outdoor or raintight-type switchgear.

Use: Current transformer installations in switchgear, 0-600 V.

CURRENT TRANSFORMER INSTALLATIONS IN SWITCHGEAR

5. Test Switch and Meter Socket Installation - Meter socket(s) are installed and supplied by the manufacturer; 13 terminal socket for three phase, 6 terminal for single phase.

****NOTE: Test Switches are not supplied by the panel manufacturer!**

For single and three phase systems, a test switch and cover or exact equivalent must be provided.

Approved Test Switches

Milbank Cat. No. TS10-0016

Durham Cat. No. 1-1058F-129

Approved Covers

Milbank Cat. No. K-3388-BLK-FL

Durham Cat. No. 7943BC-00

6. Switchgear manufactured according to the requirements of the Electric Utility Service Equipment Requirements Committee (EUSERC) is acceptable. The EUSERC plates relating to installations as described in SR-432 through SR-439 are noted on each SR drawing.

METERING, REMOTE

USE: Typical installation of switchgear with meter sockets remote.

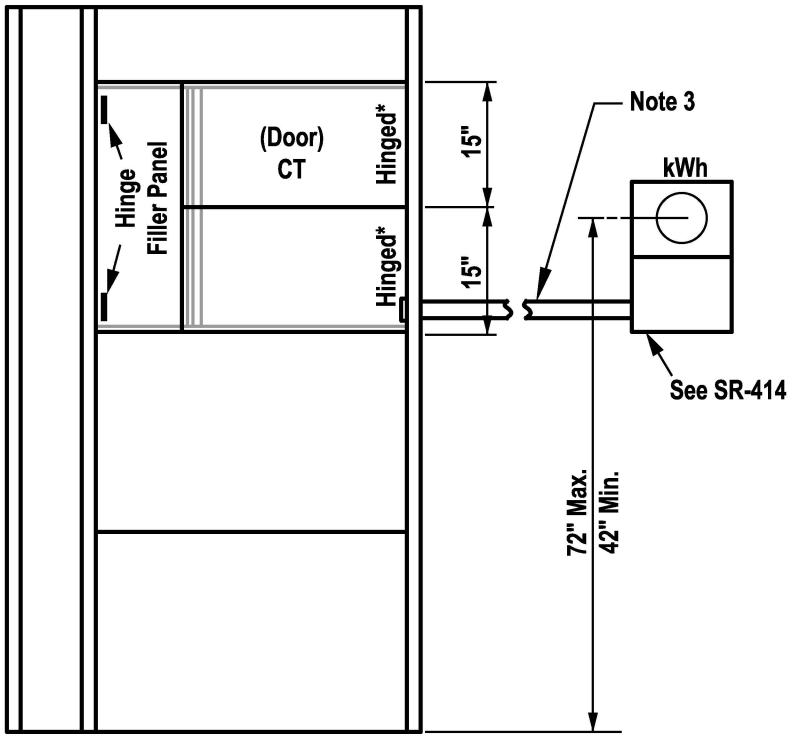

Typical Installation

NOTES:

1. See SR-430 for general requirements.

2. If switchgear is located in an inaccessible area, such as a basement or roof, the meters must be located outside in a readily accessible area. Meters must not be installed in any area that may be kept under the customer's lock and key.

3. Conduit for metering wire from the current transformers, (CT compartment), to the meter socket enclosure is provided by the customer and shall enter the meter socket enclosure at the hub or the pre-cut knock-outs. Conduit shall not interfere with the operation of the test switch. ***The metering conduit shall not have more than three 90° bends or sweeps, or combination of bends greater than 270°, and shall not exceed 120 ft. in maximum length. Conduit must be minimum 2" diameter. A Pull wire must be installed in conduit runs in excess of 50 ft.*** *Accessible and sealable pulling junctions are allowable if needed. The opening in the CT compartment shall be in front of, not blocked by, the buss bars.*

4. Maintain 36" working space in front of the current transformer compartment and meter socket(s).

USE: Combination terminating pull section and current transformer compartment, 0-600V, for underground, outdoor application.

SWITCHBOARDS, LOW PROFILE

EUSERC DWG. NO. 325/326

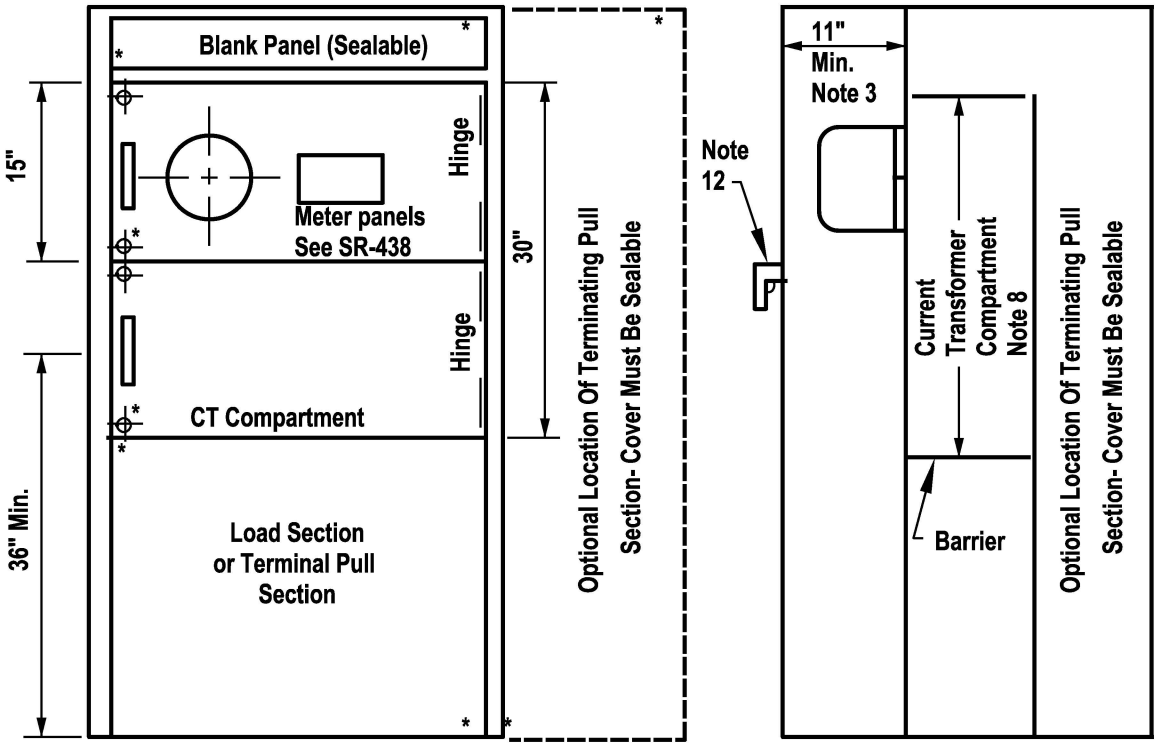

1. See SR-430 for general requirements.
2. Terminating pull section shall be located beside, behind or beneath the current transformer compartment.
3. Refer to SR-437 for door and hinge details on meter panel enclosure.
4. Filler panels shall be used where switchboard width exceeds maximum allowable meter panel width.
5. Meter panels shall not be hinged on filler or pull section panels.
6. Width of meter panels may, in some cases, require the service section to be wider than the minimum allowable width of current transformer compartment. See SR-437 and SR-438 for meter panel dimensions.
7. For current transformer compartment requirements and minimum dimensions, refer to the following plates:
   401 to 800 A, 1Ø - See SR-433 1001 to 3000 A - See SR-435
   201 to 1000 A, 3Ø - See SR-434 3001 and Larger - See SR-436
8. Current transformer compartments shall be bussed with rectangular bus bar.
9. Grounding connection shall be made in the main switch or breaker compartment.
10. Maintain 36" working space in front of the current transformer compartment.
11. See SR-430 for requirement for double locking arrangement. The CT compartment cover panels, the blank filler panels and pull section cover shall be sealable in approximately the locations indicated by the asterisks (*) in the above drawing.
12. Meter panels & filler panels shall be equipped with stops to prevent inward swinging beyond the front surface of the service section.

CT COMPARTMENT, 401-800A, 1Ø ◄
FOR SWITCHBOARDS 0-600V

EUSERC DWG. NO. 319

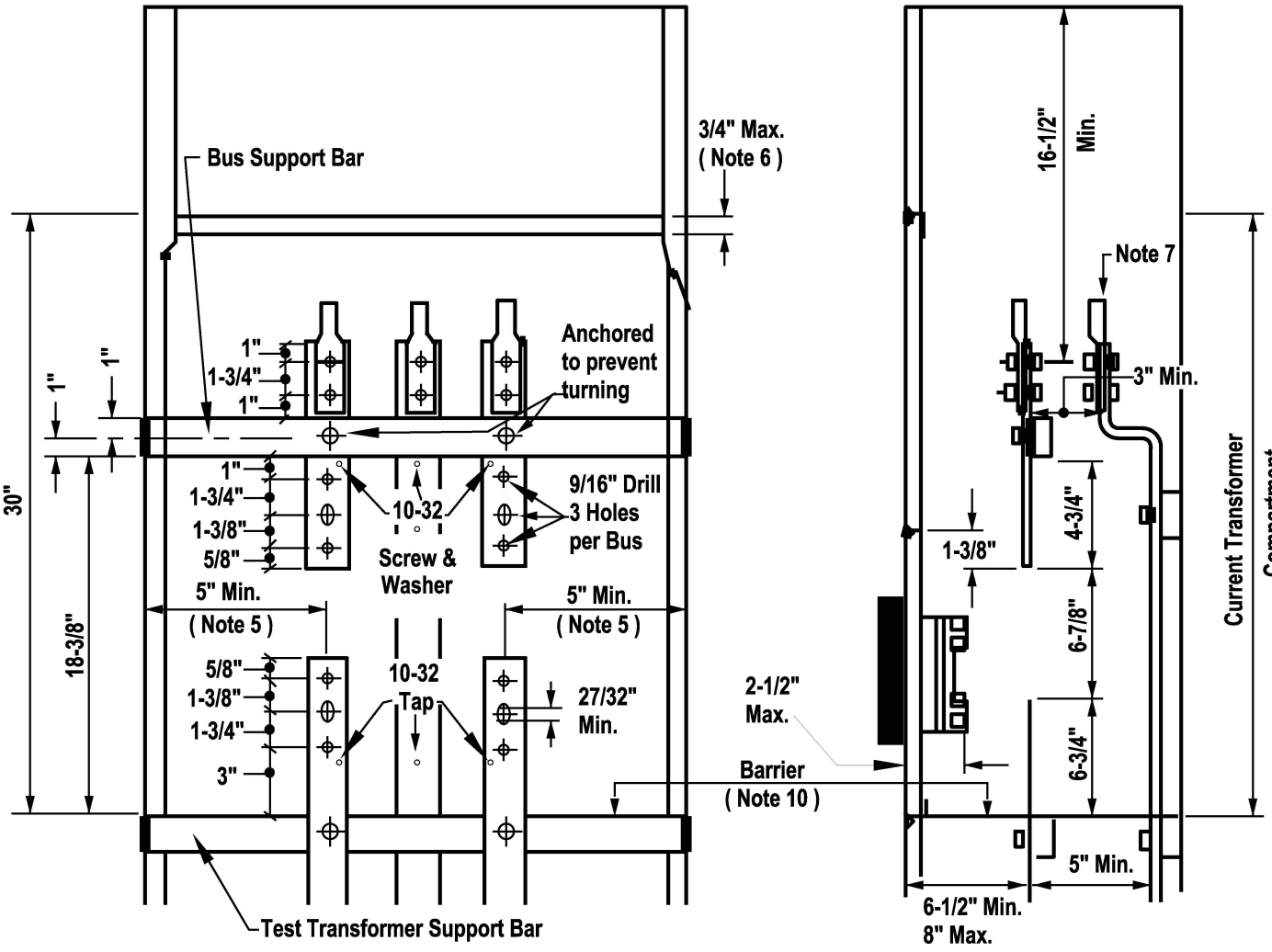

NOTES:

1. See SR-430 for general requirements.
2. Bus arrangement and supports are required as shown above, except the neutral bus may be located on the sidewall or at either side.
3. Compartment shall be on the supply side of the main switch or breaker.
4. Direction of feed may be from top or bottom and no other conductors shall pass through this compartment. The bus shall be rectangular.
5. Clearance to side of compartment shall be increased by the amount by which the corner angle exceeds 1".

NOTES: (continued)

6. Return flanges for lower and upper meter panel support shall not project more than 3/4" up or down from adjacent switchboard panels.

7. Each bus shall have a connector or connectors that will accept stranded conductors having the ampere capacity of the main switch or breaker.

8. When laminated bus is used, there shall be no space between laminations in the compartment.

9. Bus Dimensions: Max. Line Side - 3/4" x 4"; Min. - 1/4" x 2"
Max. Load Size - 3/4" x 2"; Min. - 1/4" x 2"

10. Barrier shall be of insulating nontracking material resistant to arc tracking, be rigid, with a maximum deflection of 1/2 inch from an applied force of 25 pounds downward, be secured in place, be perforated with 3/8 inch maximum diameter holes to allow ventilation in accordance with NEC, be dimensioned in physical size to fit the switchboard with a peripheral gap not to exceed 3/8 inch, and contain cutouts for through bus bars with dimensions to provide a gap between bus and barrier not to exceed 3/8 inch.

CT COMPARTMENT, 201-1000A, 3Ø
FOR SWITCHBOARDS 0-600V

EUSERC DWG. NO. 320

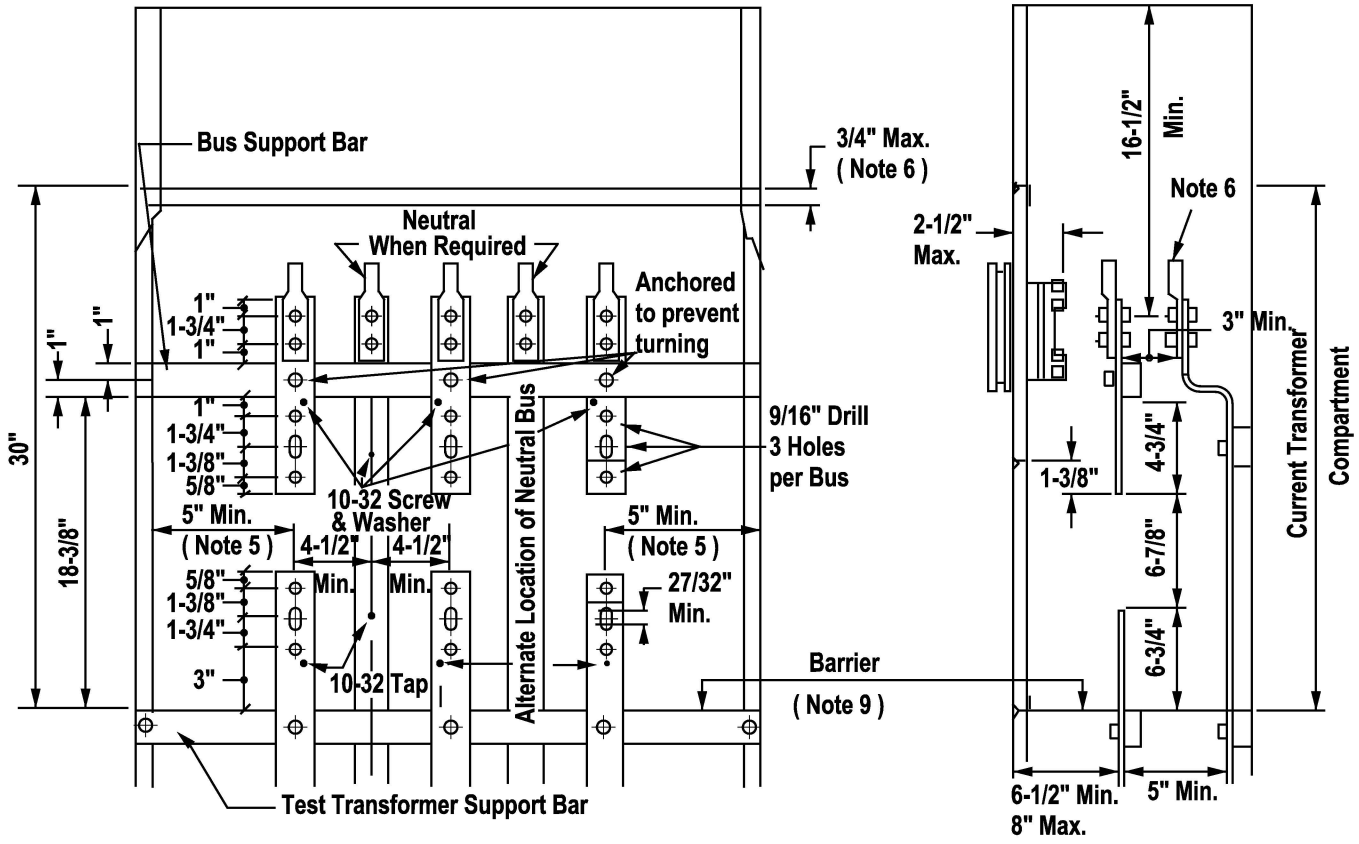

NOTES:

1. See SR-430 for general requirements.
2. Bus arrangement and supports are required as shown above, except the neutral bus may be located on the sidewall or at either side.
3. Compartment shall be on the supply side of the main switch or breaker.
4. Direction of feed may be from top or bottom and no other conductors shall pass through this compartment. The bus shall be rectangular.
5. Clearance to side of compartment shall be increased by the amount by which the corner angle exceeds 1".
6. Return flanges for lower and upper meter panel support shall not project more than 3/4" up or down from adjacent switchboard panels.
7. When laminated bus is used, there shall be no space between laminations in the compartment.
8. Bus Dimensions: Maximum Line Side - 3/4" x 4"; Minimum - 1/4" x 2"
   Maximum Load Size - 3/4" x 2"; Minimum - 1/4" x 2"
9. Barrier shall be of insulating nontracking material resistant to arc tracking, be rigid, with a maximum deflection of 1/2 inch from an applied force of 25 pounds downward, be secured in place, be perforated with 3/8 inch maximum diameter holes to allow ventilation in accordance with NEC, be dimensioned in physical size to fit the switchboard with a peripheral gap not to exceed 3/8 inch, and contain cutouts for through bus bars with dimensions to provide a gap between bus and barrier not to exceed 3/8 inch.
10. The "Power Leg" shall be identified per National Electrical Code for 4 Wire Delta Service.
11. Round bus corners as necessary to prevent damage to insulation. Bus insulation shall be adequate for the service voltage.

CT COMPARTMENT, 1001 - 3000 A, 3Ø
FOR SWITCHBOARDS 0-600 V

EUSERC DWG. NO. 322

TOP VIEW

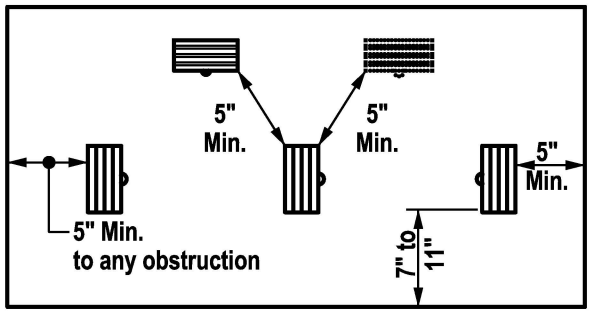

SIDE VIEW

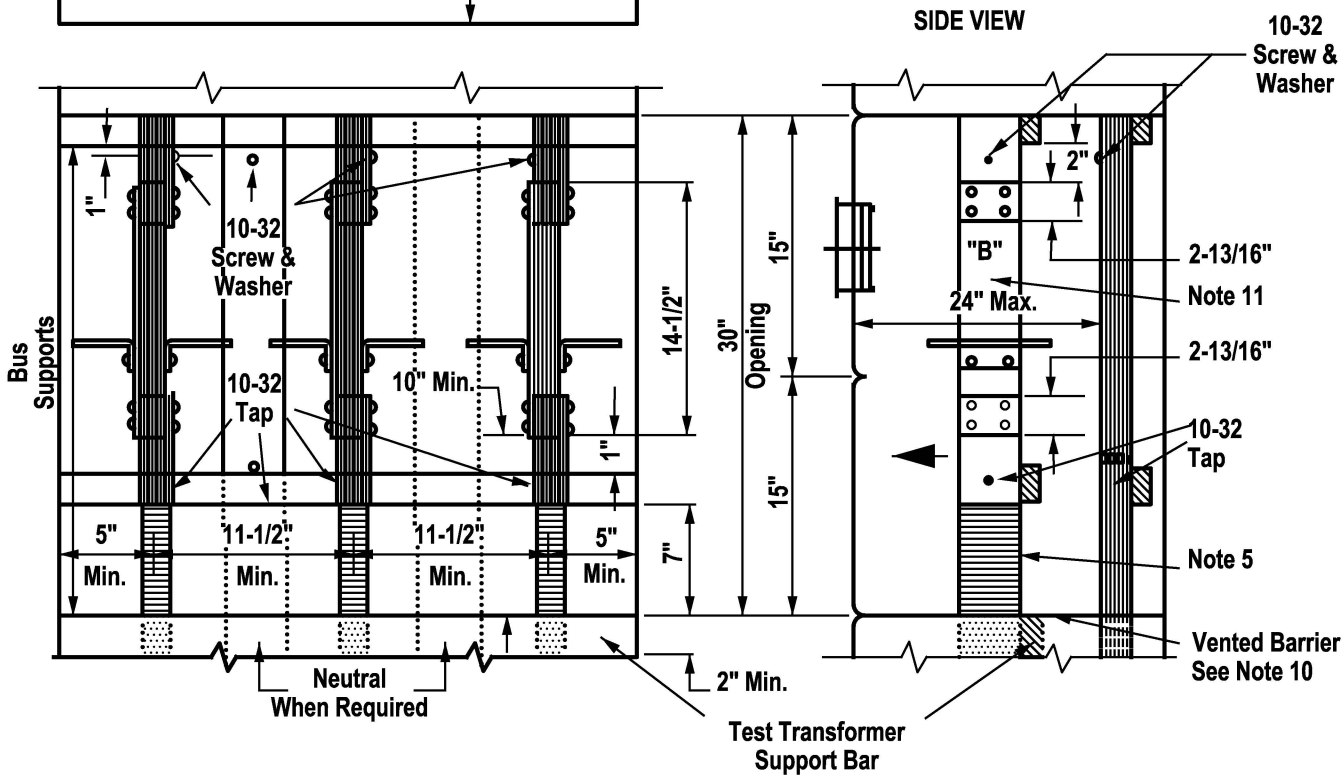

NOTES:

1. See SR-430 for general requirements.
2. Bus anchorage shall be such that busses will remain in position when removable section "B" is out.
3. Direction of feed may be from top or bottom. No other conductors shall pass through this compartment.
4. Transformer compartment shall be on the supply side of the main switch or breaker.
5. Round bus corners as necessary to prevent damage to insulation. Bus insulation to be adequate for the voltage involved.
6. The maximum permissible bus unit shall consist of four 1/4" X 4" bars space 1/4".
7. The barrier shall not be less than 45" nor more than 50" above the standing surface.

CT COMPARTMENT, 1001 - 3000 A, 3Ø
FOR SWITCHBOARDS 0-600 V

8. Clearance to the side of the compartment shall be increased by the amount by which the corner angle exceeds 1".

9. Return flanges for lower and upper meter panel support shall not project more than 3/4" up or down from adjacent switchboard panels.

10. Barrier shall be of insulating nontracking material resistant to arc tracking, be rigid, with a maximum deflection of 1/2 inch from an applied force of 25 pounds downward, be secured in place, be perforated with 3/8 inch maximum diameter holes to allow ventilation in accordance with NEC standards, be dimensioned in physical size to fit the switchboard with a peripheral gap not to exceed 3/8 inch, and contain cutouts for through bus bars with dimensions to provide a maximum gap between bus and barrier not to exceed 3/8 inch.

11. For details of removable Section "B" and CT support, See SR-439, page 1.

CT COMPARTMENT, 3001 A AND LARGER, 3Ø FOR SWITCHBOARDS 0-600 V

EUSERC DWG. NO. 324

TOP VIEW

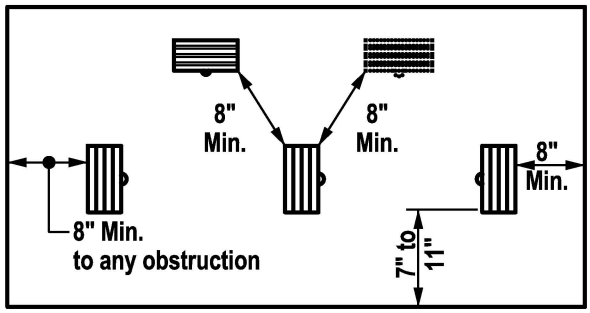

TABLE 1

Maximum Number of Bus Bars:

4 - 1/4" x 4" spaced 1/4".

6 - 1/4" x 5" spaced 1/4".

4 - 3/8" x 5" spaced 3/8".

5 - 3/8" x 5" spaced 1/4".

SIDE VIEW

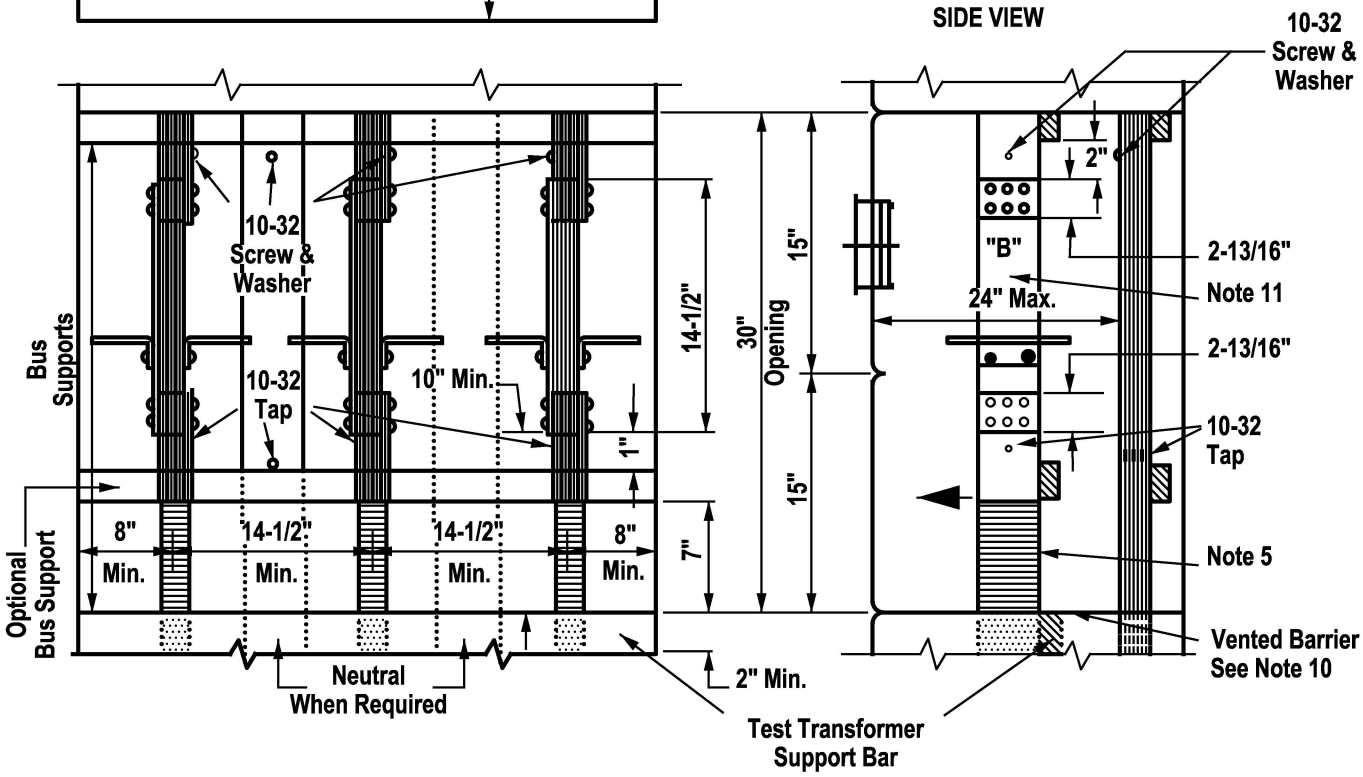

NOTES:

1. See SR-430 for general requirements.
2. Bus anchorage shall be such that busses will remain in position when removable section "B" is out.
3. Direction of feed may be from top or bottom. No other conductors shall pass through this compartment.
4. Transformer compartment shall be on the supply side of the main switch or breaker.
5. Bus shall be rectangular with corners rounded as necessary to prevent damage to insulation. Bus insulation to be adequate for the voltage.

CT COMPARTMENT, 3001 A AND LARGER, 3Ø FOR SWITCHBOARDS 0-600

NOTES: (continued)

6. The maximum bus unit (without special permission) shall consist of six 1/4" x 5" bars spaced 1/4".

7. The barrier shall not be less than 45" nor more than 50" above the standing surface.

8. Clearance to the side of the compartment shall be increased by the amount by which the corner angle exceeds 1".

9. Return flanges for lower and upper meter panel support shall not project more than 3/4" up or down from adjacent switchboard panels.

10. Barrier shall be of insulating nontracking material resistant to arc tracking, be rigid, with a maximum deflection of 1/2 inch from an applied force of 25 pounds downward, be secured in place, be perforated with 3/8 inch maximum diameter holes to allow ventilation in accordance with NEC standards, be dimensioned in physical size to fit the switchboard with a peripheral gap not to exceed 3/8 inch, and contain cutouts for through bus bars with dimensions to provide a maximum gap between bus and barrier not to exceed 3/8 inch.

11. For details of removable section "B" and CT support for 4" bus, see SR-439, Page 1; for 5" bus, see SR-439, Page 2. Consult TEP Metering Department or Service Provider for use of bus bars larger than 5".

ENCLOSED METER PANELS
IN RAINTIGHT SWITCHGEAR 0-600V

EUSERC DWG. NO. 354
(Modified)

Front Views

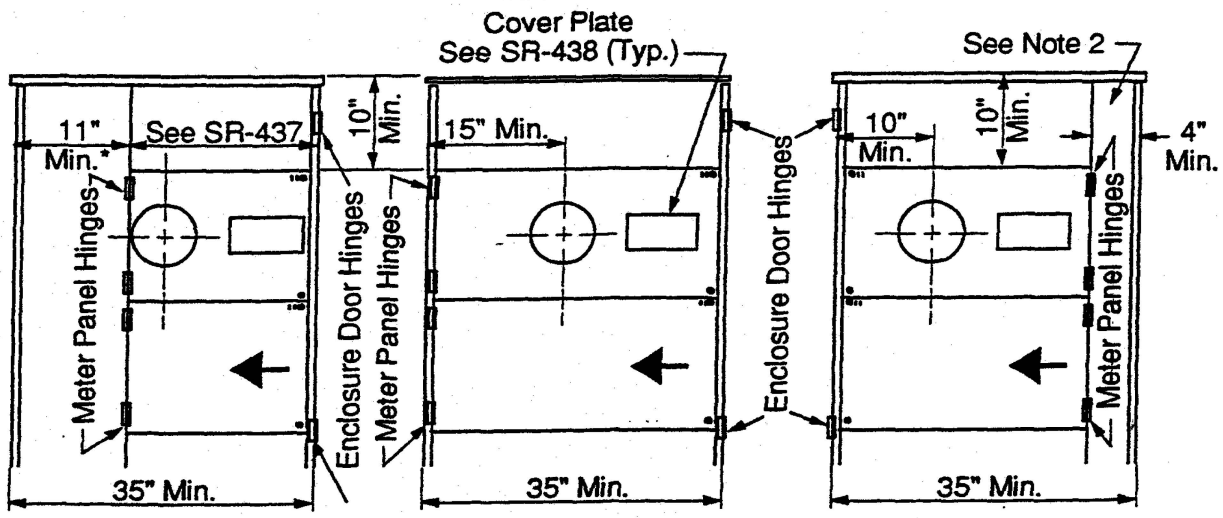

Fig. 1 Fig. 2 Fig. 3

Top Views

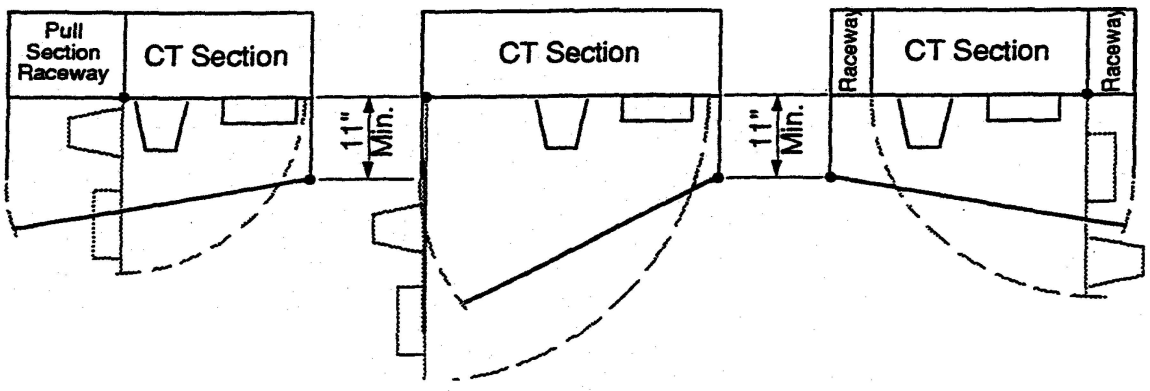

NOTES:

1. See SR-430 for general requirements.
2. Hinged meter panels shall be capable of being opened 90° with meter and test facilities in place. The hinges shall be readily interchangeable right or left on the job site. For other details, SR-438.
3. All access panels above the breaker section shall be sealable.
4. The meter heights of SR-405, page 1, will apply in full switchboard height meter enclosures.
5. Recording demand meters require special meter panels and clearances in or on all switchboards. See SR-438.
6. For installations described in SR-435 or SR-436, the panel should be hinged from the sidewall. The edge of the meter socket or test switch slots shall be 1" plus the depth of the recess from the hinged side.
7. Where an adjacent obstruction extends more than 11" perpendicularly from the face of the meter panel, a 10" minimum dimension to the meter socket axis is required. For obstructions extending 11" or less from the meter panel, the side clearance shall be a minimum of 6-1/4".
8. All securing screws shall be captive. All panels and covers shall be sealable.

SWITCHBOARD METER PANELS

EUSERC DWG. NO. 332

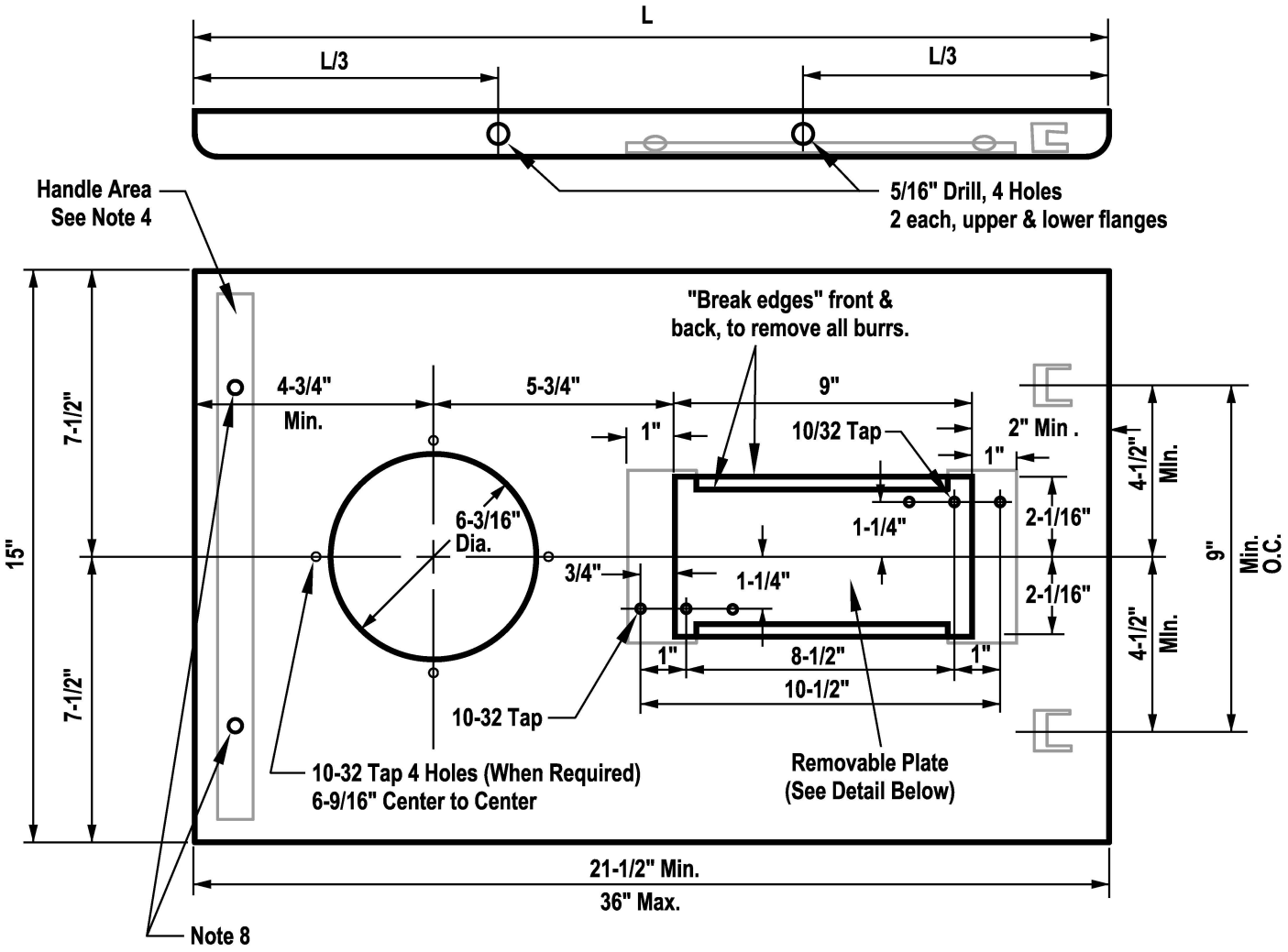

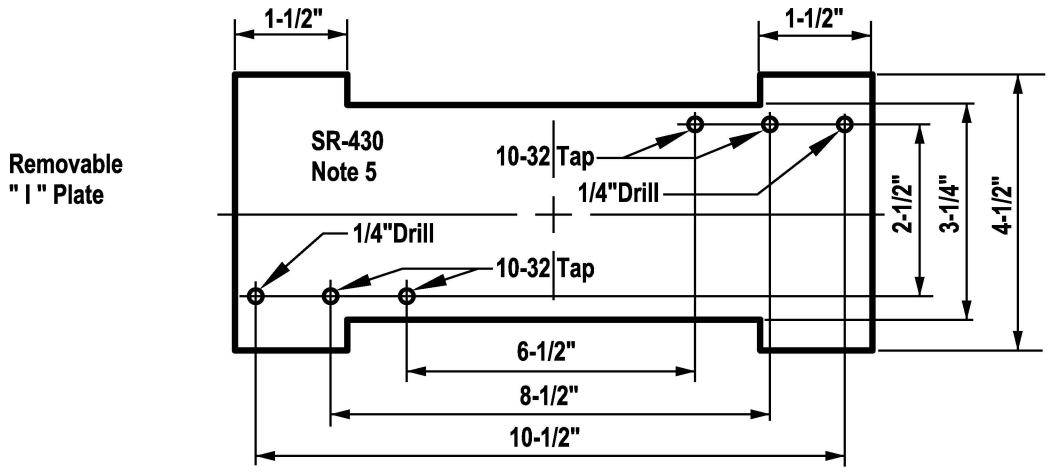

FIG. 1 - FOR ALL EXCEPT RATE 14, 90A CUSTOMERS.

See Notes, Page 3

Tucson Electric Power / UniSourceEnergy Services SANTA CRUZ COUNTY	INITIATED BY	SC	REVISION NO.	5	SR-438 Pg. 1 of 4
	STANDARDS COMM.	10-81	STANDARDS COMM.	12-99	
			EFFECTIVE DATE	1-00	

SWITCHBOARD METER PANELS

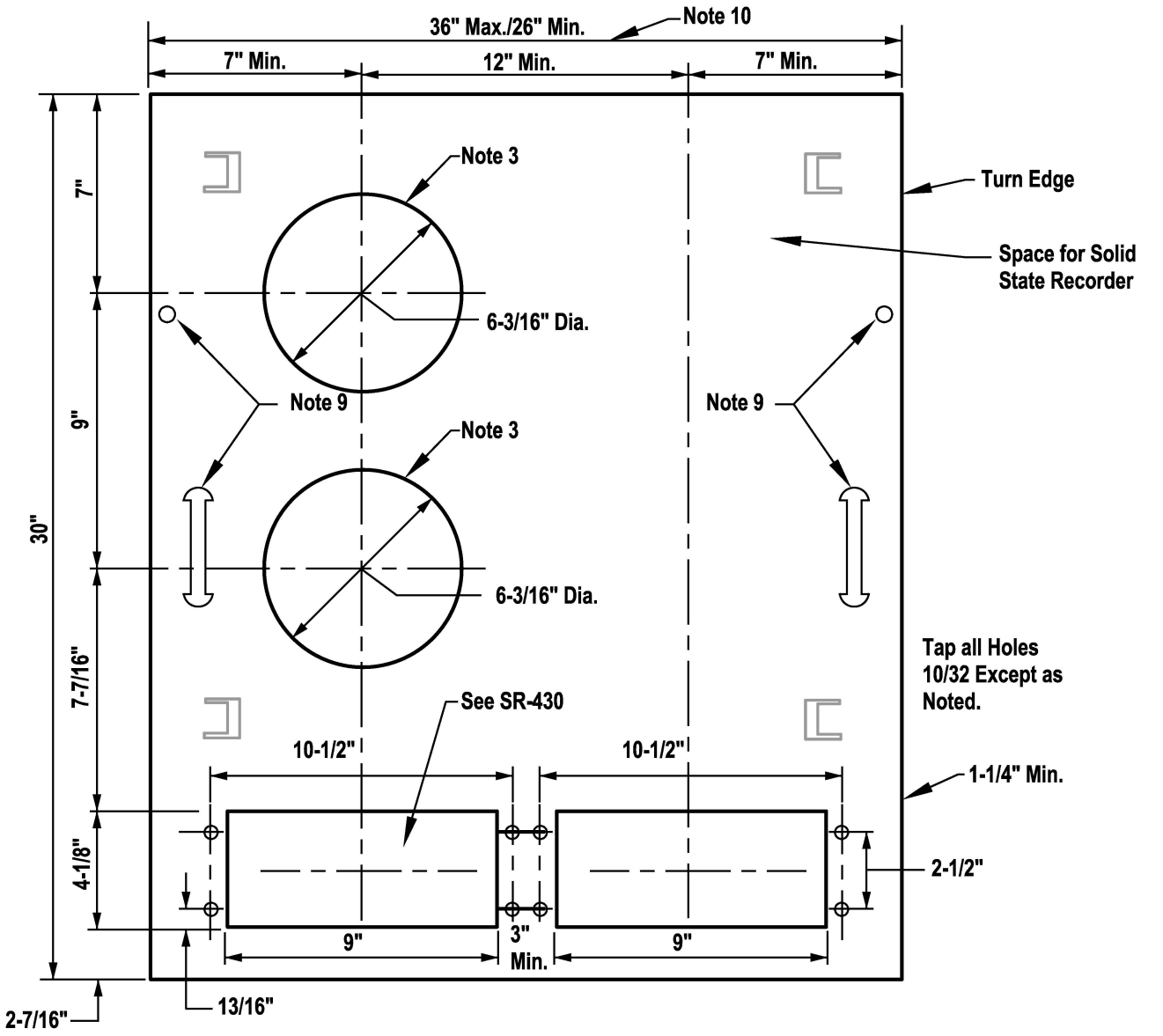

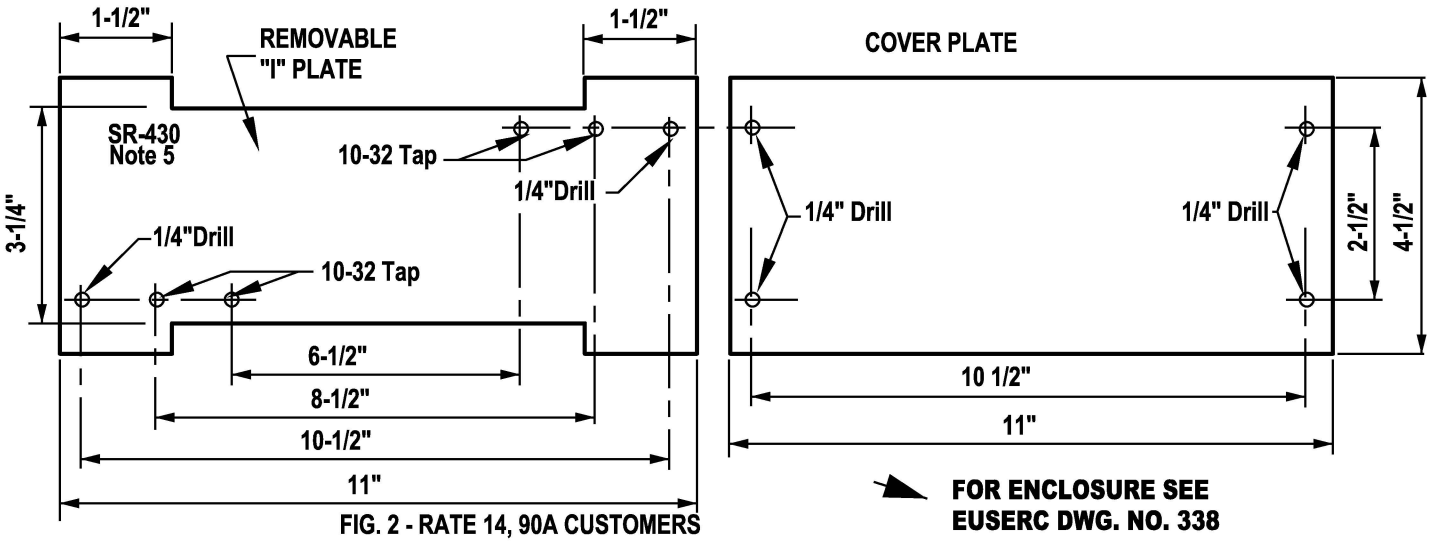

FIG. 2 - RATE 14, 90A CUSTOMERS

FOR ENCLOSURE SEE EUSERC DWG. NO. 338

See Notes, Page 3

Switchboard Meter Panels

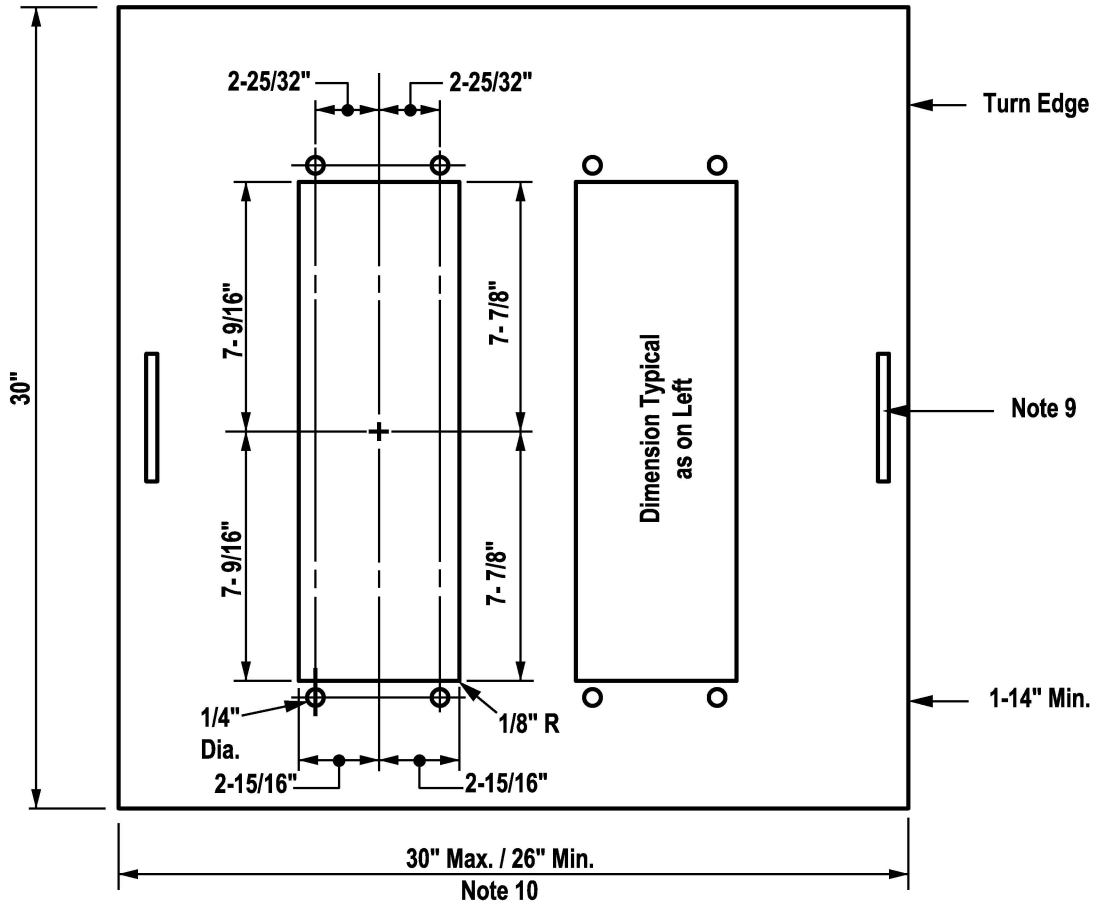

Figure 3 - Customers with Totalized Metering

Notes:

1. See SR- 430 for general requirements.
2. Meter panels shall be constructed of 12 gauge steel (minimum) and shall be hinged, reversible, sealable and interchangeable.
3. The switchboard manufacturer shall drill, tap and slot the panel as shown for secondary test switches and shall furnish and install sockets complete with sealing rings. Meter sockets installed on hinged panels shall be designed for back connection. Customer shall provide and install the appropriate test switch. **(Test switch not supplied by panel manufacturer)** See SR-430, Page 2.
4. Hinges shall be readily interchangeable, right to left, on the job site. When clevis type or removable pin type hinges are used, provision shall be made that pin can be removed from the top. Hinges must support a 25-pound load applied at unsupported end with 1/8" maximum sag when open. Meter panels shall not be hinged on filler or pull section panels.
5. A handle shall be attached at the unsupported end of the meter panel with a minimum clearance of 1" from the meter socket.

6. Meter Panels shall be capable of being opened 90° with meter and test facilities in place.

7. Removable plate(s) shall be secured to rear of panel by screw of such a length so as not to protrude through face of panel. Fig. 1 and Fig. 2 only.

8. All securing and sealing screws on panel shall be captive. Studs and wire nuts shall be sealable when used.

Additional Requirements for Rate 14, Rate 90A Customers:

9. Panel shall have handle attached to each side.

10. For panel width of less than 26", consult Design, Service Requirements & Service Delivery Department.

11. Customer shall provide a telephone line for transmitting metering data.

12. For totalized metering contact Design, Service Requirements & Service Delivery Department.

REMOVABLE BUS LINKS AND CT SUPPORTS
1001-3000 A, 0-600 V

EUSERC DWG. NO. 330

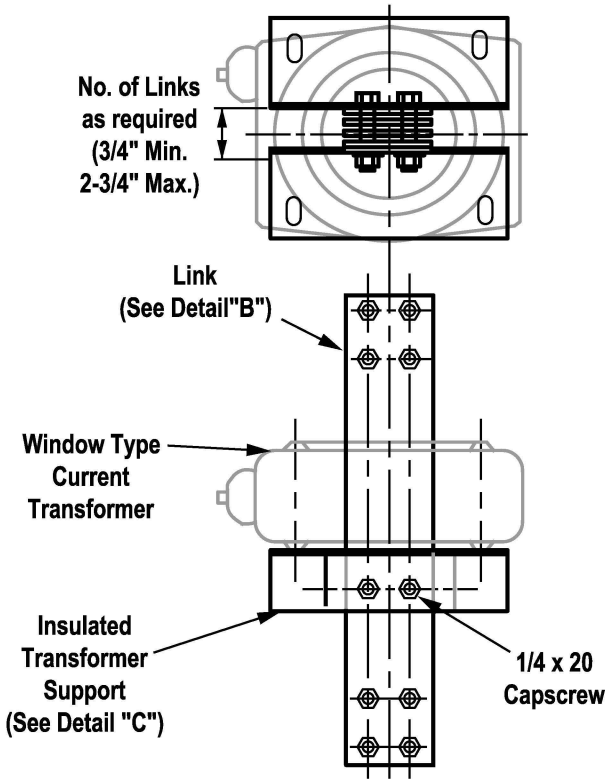

REMOVABLE LINK ASSEMBLY
(Furnished by Manufacturer)

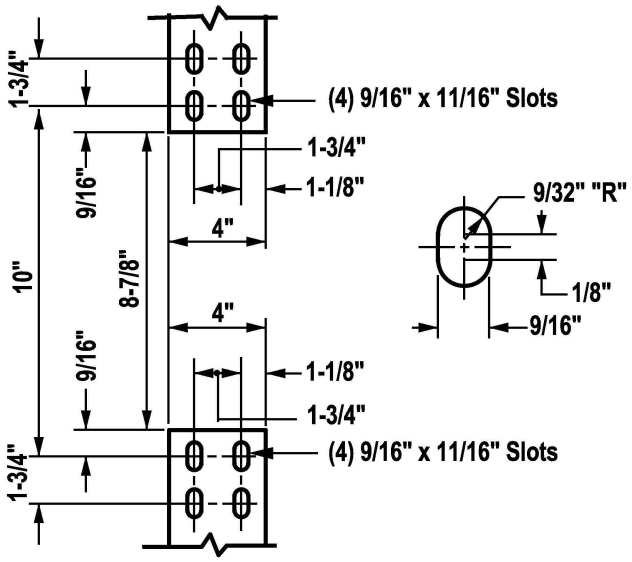

DETAIL "A"
DRILLING AND SPACING OF BUS

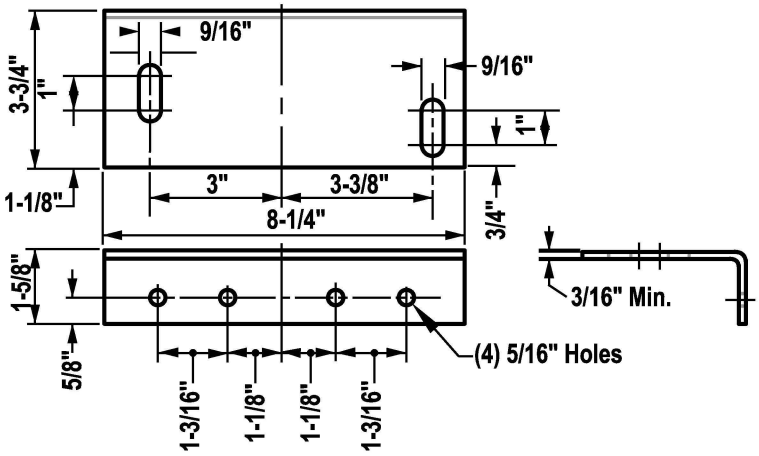

DETAIL "C"
INSULATED SUPPORT FOR
CURRENT TRANSFORMER
(Material: Insulating, Non-Tracking)

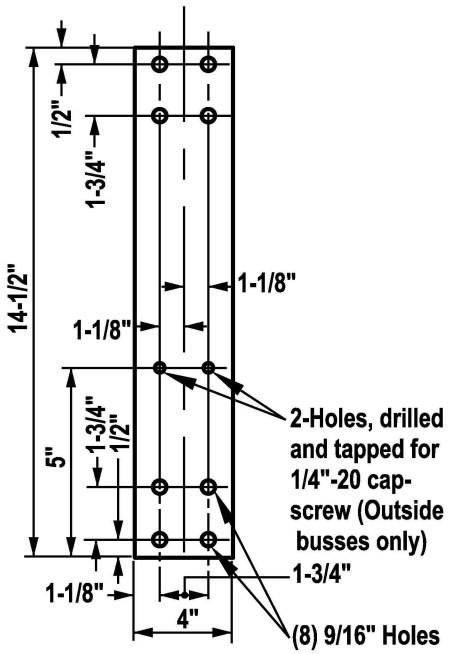

DETAIL "B"
1/4" X 4" LINK
(Same Material as Bus)

NOTE: 1. Manufacturer to provide 1/2 inch hex head bolts, nuts, & lock washers.

Tucson Electric Power / UniSourceEnergy Services SANTA CRUZ COUNTY	INITIATED BY	SC	REVISION NO.	1	SR-439 Pg. 1 of 2
	STANDARDS COMM.	10-81	STANDARDS COMM.	10-85	
			EFFECTIVE DATE	1-86	

REMOVABLE BUS LINKS AND CT SUPPORTS
3001 A and Larger, 0-600 V

EUSERC DWG. NO. 331

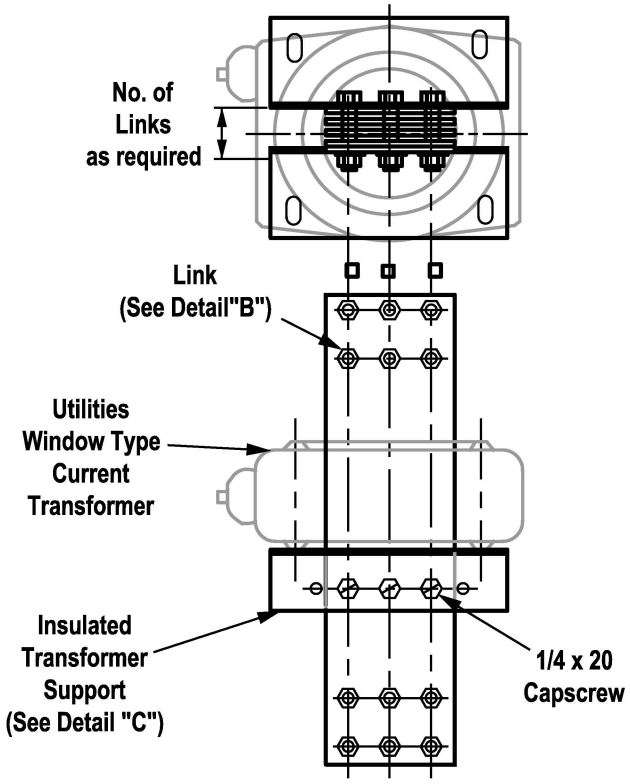

REMOVABLE LINK ASSEMBLY
(Furnished by Manufacturer)

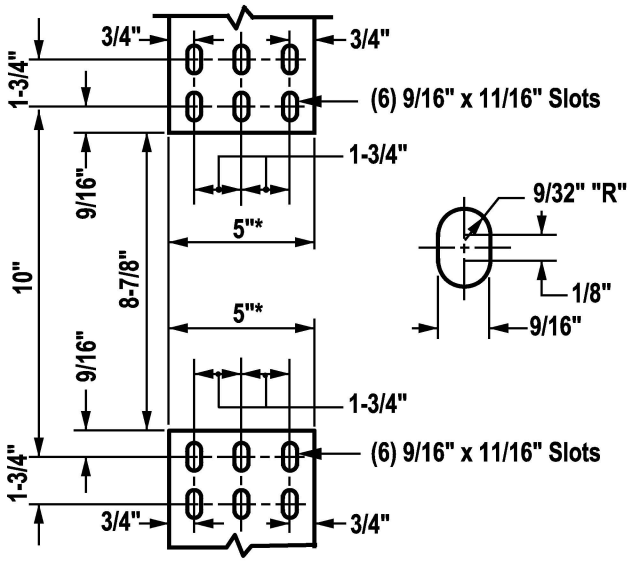

DETAIL "A"
DRILLING AND SPACING OF BUS

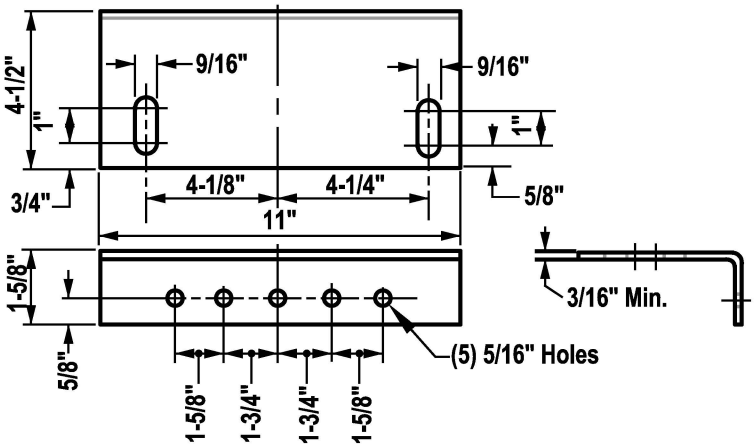

DETAIL "C"
INSULATED SUPPORT FOR CURRENT TRANSFORMER
(Material: Insulating, Non-Tracking)

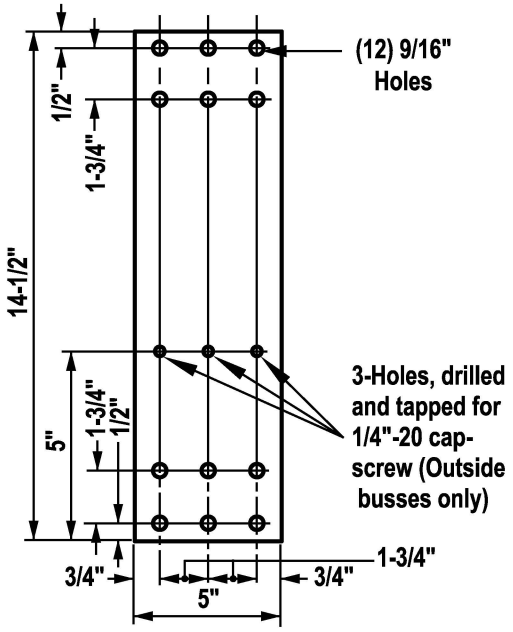

DETAIL "B"
1/4" X 5" LINK
(Same Material as Bus)

NOTE: 1. Manufacturer to provide 1/2 inch hex head bolts, nuts, & lock washers.
2. Consult Design, Service Requirements & Service Delivery Department for use of bus bars larger than 5". ◀

Tucson Electric Power / UniSourceEnergy Services SANTA CRUZ COUNTY	INITIATED BY	SC	REVISION NO.	2	SR-439 Pg. 2 of 2
	STANDARDS COMM.	12-81	STANDARDS COMM.	8-93	
			EFFECTIVE DATE	1-94	

PRIMARY METERED SERVICE

GENERAL

To qualify for one of the TEP's published primary service rates, a customer must install, own and maintain the equipment and material as outlined herein. The customer's installation shall comply with TEP's specifications as well as the requirements of the National Electrical Code and/or local codes. Primary metered service available only at TEP's option.

For primary service loads in excess of 140 amperes, the customer shall have a system of breakers or fuses which will protect TEP's system from faults in the customer's distribution lines and transformers. All equipment installed between the primary service point of delivery and the customer's first protection device shall meet TEP's minimum standards for feeder design, and the protective device shall be located as close to the point of delivery as practical. TEP shall provide the customer with the maximum available short circuit current and relay characteristics and settings on TEP breakers for proper coordination of the customer's protective device with TEP's system. The customer shall provide the characteristics of his protective device to TEP. The customer's system design must be approved by TEP.

Design, Service Requirements, and Service Delivery Department will review the customer's electrical plan and specify locations for point of delivery and customer provided service and metering facilities, whether pole mounted or pad mounted. TEP will prepare a construction drawing which depicts TEP primary service design and TEP requirements for same.

All primary metered services will require a "high voltage release" be signed by the customer in advance of service. In addition, easements may be required prior to the installation of TEP facilities.

The Customer shall provide a dedicated phone circuit to be utilized by TEP's Metering Department to allow communications with the metering equipment.

NORMAL SEQUENCE OF ACTIVITIES ASSOCIATED WITH ESTABLISHING OVERHEAD PRIMARY METERED SERVICE

1. Design, Service Requirements, and Service Delivery Department specifies location of metering poles. Customer install primary service pole with all related equipment as required and accordance with TEP specifications as shown on Pages 3,4, and 5. Customer specifies kind and size of cables and/or conductors that he will be installing.

2. Once all necessary easements are obtained and the installation is complete as outlined in Item 1 above customer calls Scheduling Coordinator for service inspection.

3. Design, Service Requirements and Service Delivery Department inspects customer's installation and, upon approval, releases work order to install primary service line and metering equipment with meters. Service Provider will contact TEP for joint meet.

4. Line construction crew installs fused or switched primary service line to customer Service pole and terminates source side conductor. Line construction crew leaves primary service de-energized and grounded.

5. TEP or Service Provider completes wiring of meter and advises the Scheduling Coordinator.

6. Customer terminates cable, if underground, and connects load conductors to load side terminals of CT's. When complete, customer call Scheduling Coordinator.

7. Design, Service Requirements, and Service Delivery Department makes final inspection and, if passed, arranges for meter set order to be released if all contingencies are met. Scheduling Coordinator schedules the customer's electrical contractor to be at the when service to be energized.

8. Scheduling Coordinator contacts TEP Metering Department to set meter or to coordinate with Service Provider joint meet to set meter and energize.

9. If Service Provider meter set, Metering Department completes checkout of metering installation, once energized.

NORMAL SEQUENCE OF ACTIVITIES ASSOCIATED with establishing UNDERGROUND PRIMARY METERED SERVICE

1. Customer provides and installs either an approved pad-mounted primary metering enclosure package (Page 6) or a fabricated enclosure (Page 8) at location specified by Design, Service Requirements, and Service Delivery Department.

2. Customer provides and installs a pad for metering enclosure (Page 7) and duct from his primary metering enclosure to TEP pole or TEP pad-mounted equipment. The duct installation shall meet the requirements of SR-205, SR-220 and SR-240 (if applicable). The duct size will be determined by TEP and will be shown on TEP's construction drawing.

3. Customer provides and installs metering conduit and meter socket(s) in accordance with the following requirements:

   0-200A; See SR-423, Note 3; 201-800A: See SR-431, SR-437, SR-438, and SR-451, pg. 8-12.

4. Once all necessary easements are obtained and the installation is complete as outlined in items 1-3 above, customer calls Scheduling Coordinator for service inspection.

5. Design, Service Requirements, and Service Delivery Department inspects customer's installation and, upon approval, releases work order to install primary service cable and metering equipment without meter.

6. Design, Service Requirements, and Service Delivery Department makes final inspection and, if passed, releases work order to install primary service cable and metering equipment without meter.

7. Line construction crew installs fused or switched primary service line to customer's pad-mounted primary metering enclosure, terminates the line side and leaves cable deenergized.

8. Once all contingencies are met, Scheduling Coordinator arranges for completion of metering work with either TEP's Metering Department or Service Provider. Scheduling Coordinator schedules customer's electrical contractor and Service Provider to be at the site when service is to be energized. TEP's metering crew completes wiring installation and check out of metering and leaves energized.

9. If Service Provider meter set, Metering department completes checkout of metering installation, and coordinates energizing.

PRIMARY METERED SERVICE
OVERHEAD-TO-OVERHEAD

USE: 7.97/13.8kV or 2.4/4.16kV primary service.

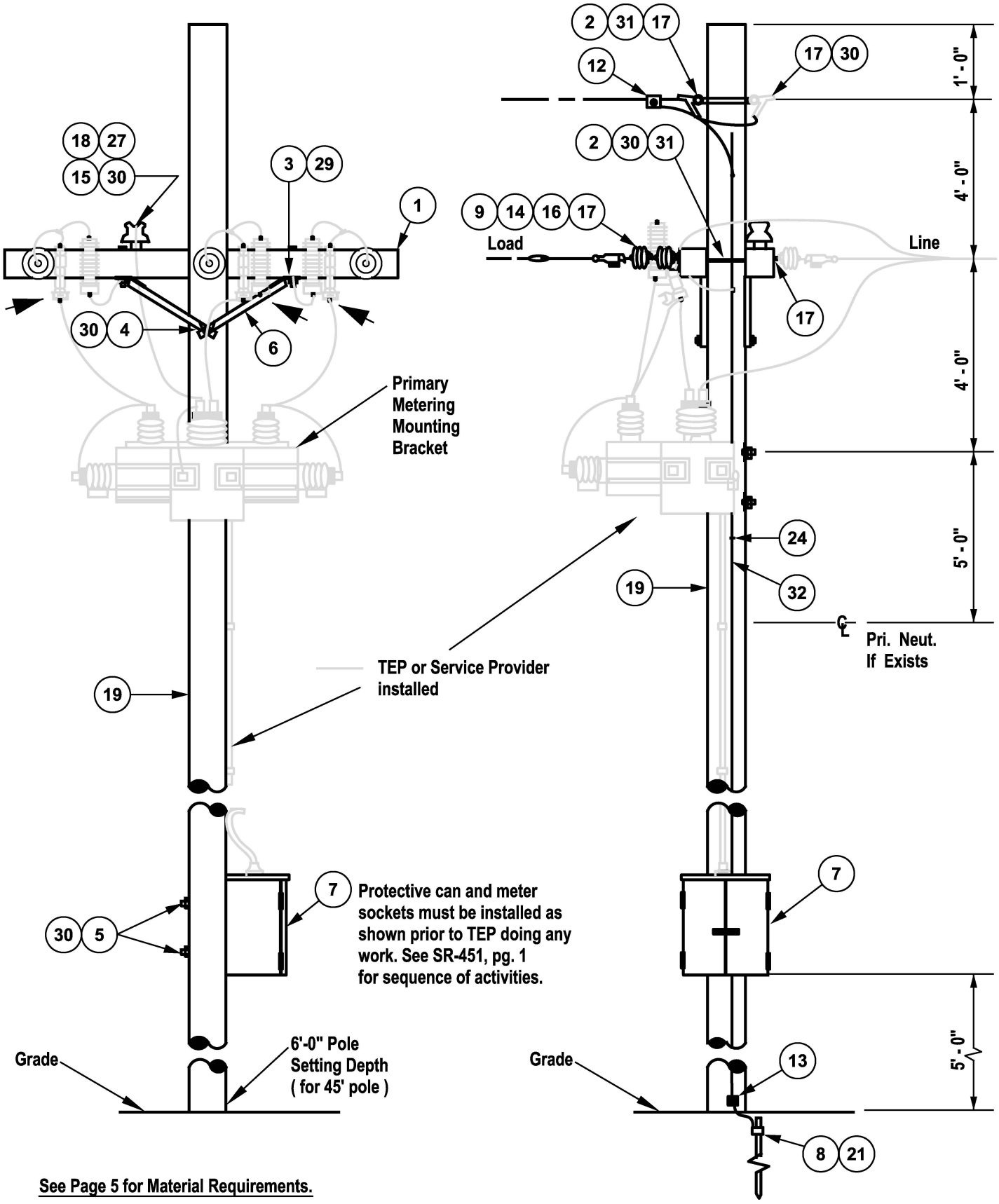

See Page 5 for Material Requirements.

Tucson Electric Power / UniSourceEnergy Services SANTA CRUZ COUNTY	INITIATED BY	ES	REVISION NO.	6	SR-451 Pg. 3 of 12
	STANDARDS COMM.	10-84	STANDARDS COMM.	10-91	
			EFFECTIVE DATE	1-92	

USE: 7.97/13.8kV or 2.4/4.16kV primary service.

PRIMARY METERED SERVICE OVERHEAD-TO-UNDERGROUND

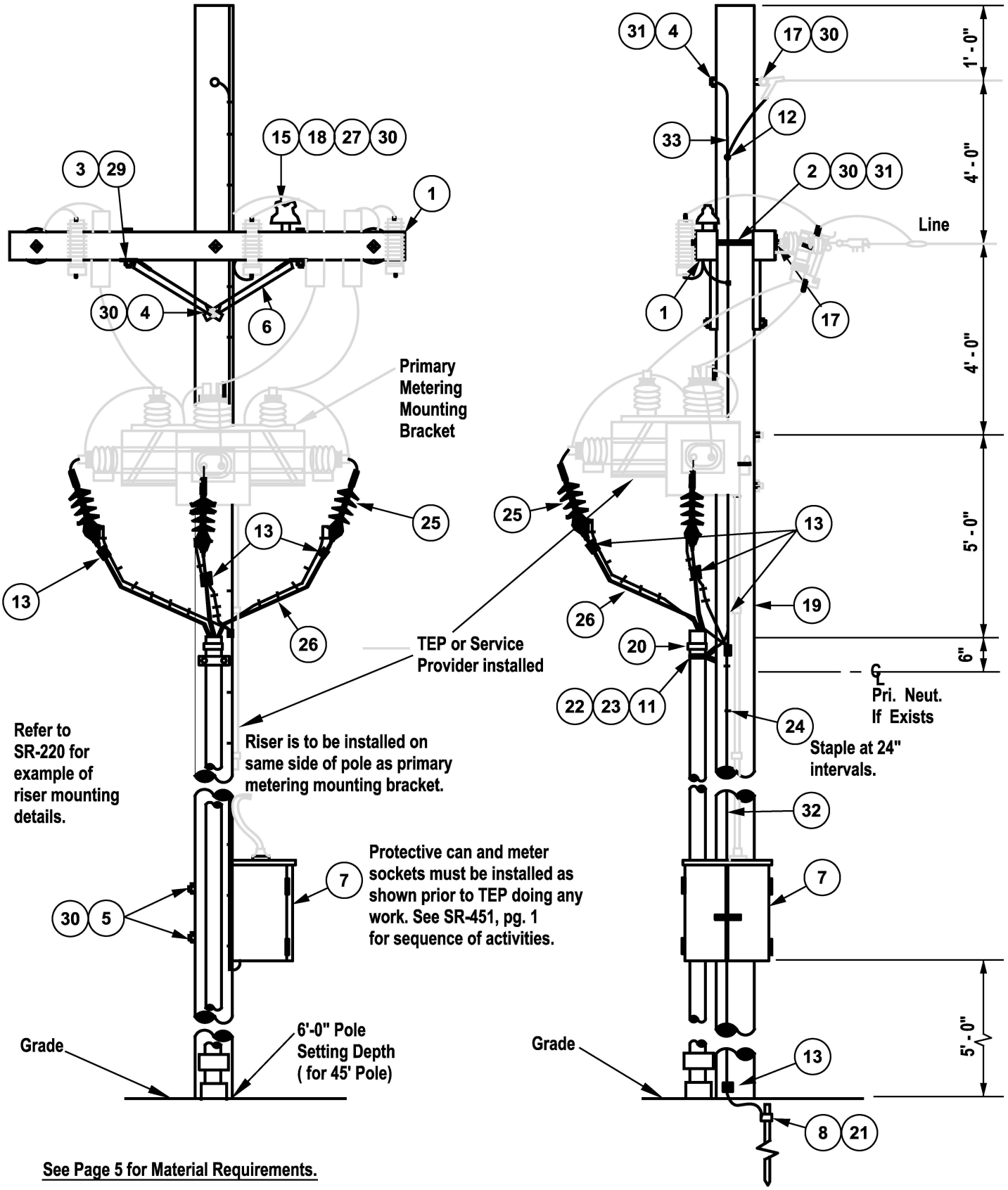

See Page 5 for Material Requirements.

Tucson Electric Power / UniSource Energy Services SANTA CRUZ COUNTY	INITIATED BY	ES	REVISION NO.	6	SR-451 Pg. 4 of 12
	STANDARDS COMM.	10-84	STANDARDS COMM.	10-91	
			EFFECTIVE DATE	1-92	

Item No.	Description	Quantity				Ref. TEP Spec.
		OH-OH 13.8 kV	OH-OH 4 kV	OH-UG 13.8 kV	OH-UG 4 kV	
1.	Arm, 8' 4SP	2	2	2	2	EM-A35
2.	Bolt, D.A. 5/8" x 18"	4	3	3	3	EM-B25
3.	Bolt, Mach. 1/2" x 7"	4	4	4	4	-
4.	Bolt, Mach. 5/8" x 12"			1		EM-B30
5.	Bolt, Mach. 5/8" x 14"	2	3	2	2	EM-B30
6.	Brace, Wood	4	4	4	4	EM-B76
7.	Cabinet, "F" Can *	1	1	1	1	SR-420
8.	Clamp, Ground Rod	1	1	1	1	EM-C27
9.	Clamp, Strain	3	3			EM-C25
10.	Clamp, Strain (Static)	1				EM-C25
11.	Conduit, Rigid Al			30'	30'	-
12.	Connector, (Pri. Neut-Gnd)		1		1	EM-C60
13.	Connector, Split Bolt #1	1	1	5	5	EM-C80
14.	Insulator, Suspension	6	6			EM-I22
15.	Insulator, Tie Top, 13.8 kV	1	1			EM-I20
16.	Link, Ext. (Center Phase Only)	1	1			EM-L70
17.	Nut, Eye	8	6	4	4	EM-N80
18.	Pin, Steel (Long Shank)	1	1	1	1	EM-P17
19.	Pole (45' Class 3 Min.)	1	1	1	1	EM-P80
20.	Riser, Grounding			1	1	EC-750
21.	Rod, Ground	1	1	1	1	EM-C25
22.	Screw, Lag 1/2" x 4"	1	1	8	8	EM-S10
23.	Standoff Bracket			4	4	EM-B76
24.	Staple, Ground Wire	18	18	18	18	EM-S60
25.	Termination Kit **			3	3	EC-1476
26.	Tie, Cable			9	9	EM-T25
27.	Tie, Insulator	1	1	1	1	EM-T15
28.	Washer, Round 3/8"	3	3	3	3	EM-W10
29.	Washer, Spring 1/2"	4	4	4	4	EM-W10
30.	Washer, Spring 3/4"	8	8	8	8	EM-W10
31.	Washer, Square 13/16"	6	6	6	6	EM-W10
32.	Wire, Ground #4 CW	48'	48'	48'	48'	EM-W84
33.	Wire, Ground #2/0 Str., Cu.	20'	20'	20'	20'	EM-W81

* Customer is to provide socket requirements within "F" can. Refer to SR-414, Page 2, for details.

** For load conductor size 1/0 AWG and below, customer to provide termination kit with pin terminal; for load conductor size larger than 1/0 AWG, order termination kit with 90° 2-hole connector.

Primary Metering Enclosure
200A Max.,
13.8 kV; 3Ø, 4W Grd Y

PRIMARY METERED SERVICE
PAD-MOUNTED METERING
200A OR LESS

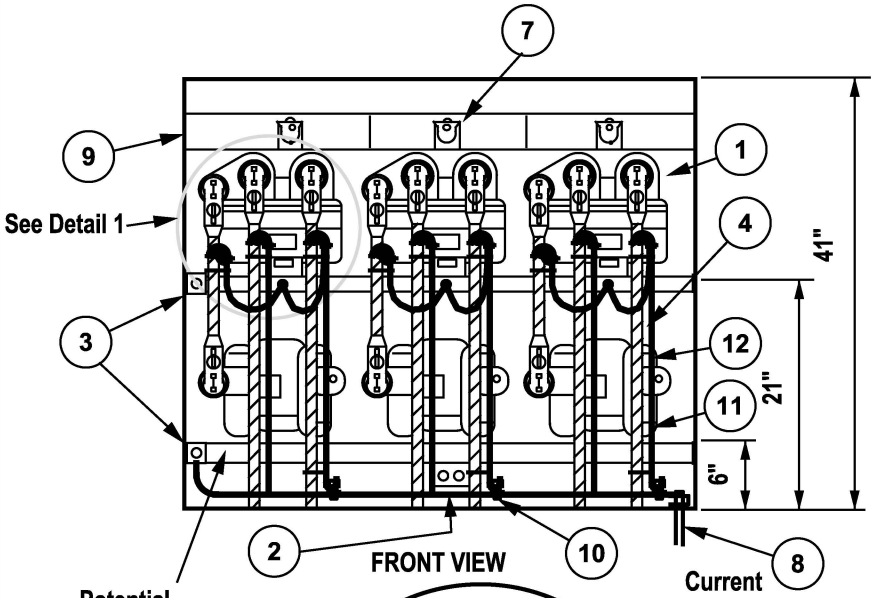

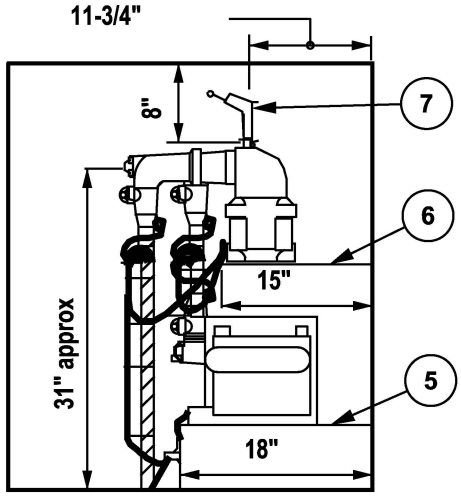

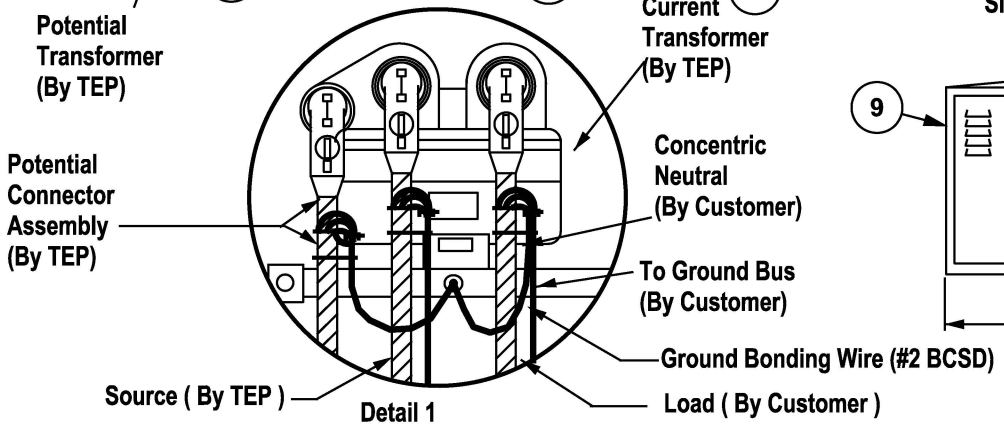

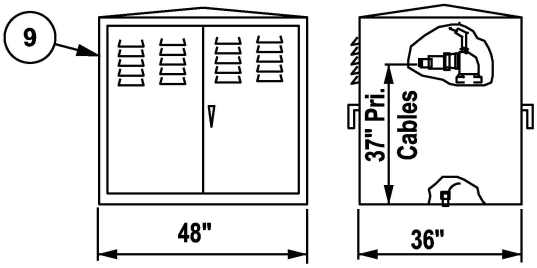

Item No.	Description	Ref. TEP Spec.
1.	Bushing & Elbow, 200A Load-break (3)	EM-B100 / EM-E70
2.	Ground Clamp (No. 2-500 MCM)	-
3.	Ground Clamp (No. 8-2/0)	-
4.	Primary Cable / Concentric Neutral	-
5.	Potential Transformer Shelf	-
6.	Current Transformer Shelf	-
7.	Parking Stand Bracket	-
8.	Ground Rod	EM-R78
9.	Cabinet, Enclosure	-
10.	Connector, Para. Groove, Center Bolt	EM-C80
11.	Wire Tie	EM-T25
12.	Wire, #2 Str. Cu.	EM-W81

NOTES:

1. Meter socket(s) and metering conduit shall be installed per SR-423.
2. Customer shall leave sufficient slack in cable to allow the 200A Elbows to be raised/secured to the parking stand bracket.
3. The pad-mounted enclosure shall conform to the latest revision of the Western Underground Guide 2.13, " Security for Pad-Mounted Equipment Enclosures."
4. The following list represents approved padmounted enclosures:
   - A. Malton Enclosure - Cat No. MEF 483642-M-SP
   - B. Maysteel Co. - Cat No. 63456803

PRIMARY METERED SERVICE
PAD-MOUNTED METERING
200A OR LESS

FIG. 1
PRIMARY METERING
PAD FOR ENCLOSURE
SHOWN ON PAGE 6

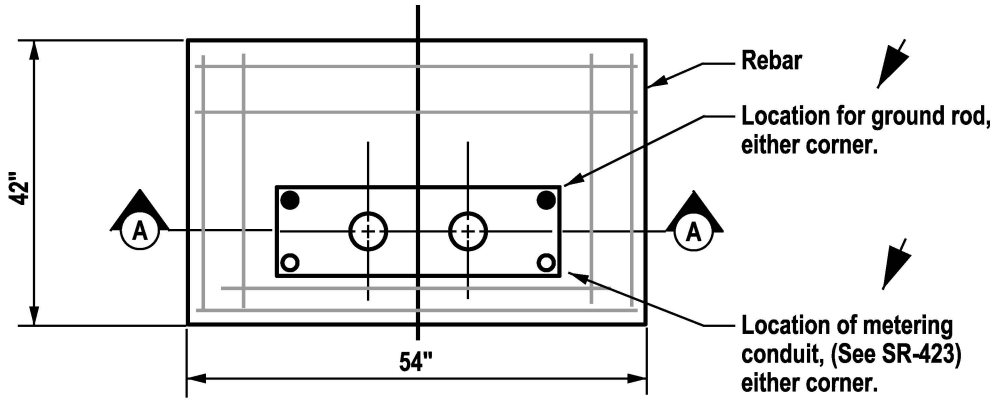

TOP VIEW

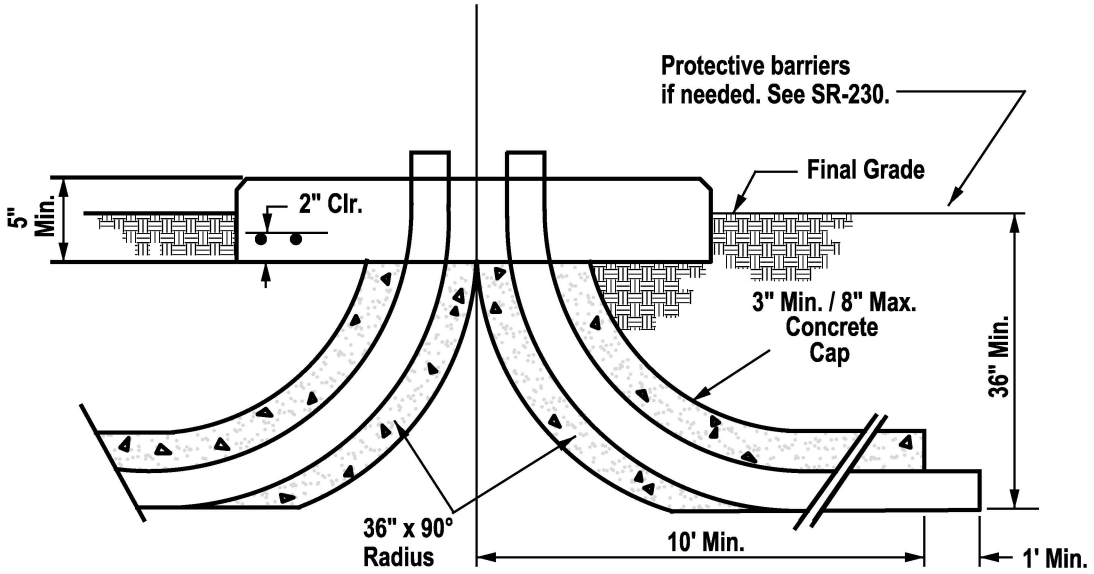

SECTION A-A

NOTES:

1. The pad size and duct placement are dependent on the enclosure used and requires plan review and approval by Design, Service Requirements & Service Delivery Dept. All rebar shall be No. 4 and shall be placed so that it does not extend into the pad opening. All concrete and reinforcement shall meet specifications contained in SR-205. The pad surface shall be level and troweled smooth.

2. The pad opening size shall be such that the opening in the enclosure completely covers the pad opening, thereby preventing entry into the compartment.

3. The rear edge and the sides of the enclosure pad shall be no closer than 3' to any building, wall or fence, and no structure of any kind shall overhang the pad and/or easement.

PRIMARY METERED SERVICE
PAD-MOUNTED METERING
200-800 AMPS

EUSERC DWG. NO. 407

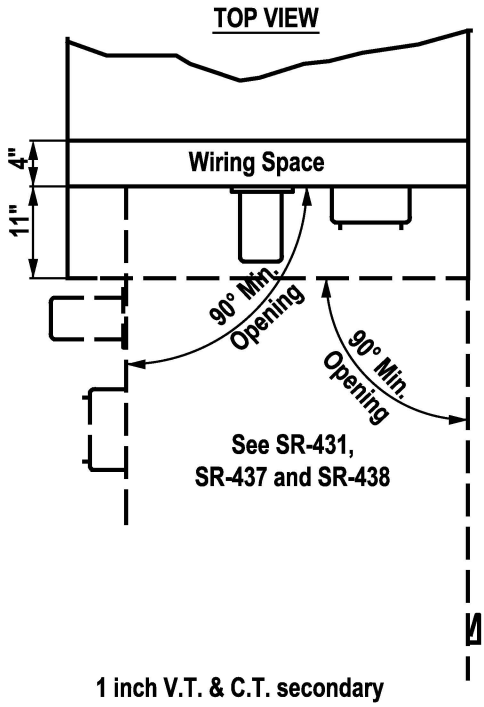

RATING 14400 V

MINIMUM BARE BUS CLEARANCE Ø TO GROUND = 6"

MINIMUM BARE BUS CLEARANCE Ø TO Ø = 7-1/2"

1 inch V.T. & C.T. secondary conduits shall be located on the same side as meter panel hinges.

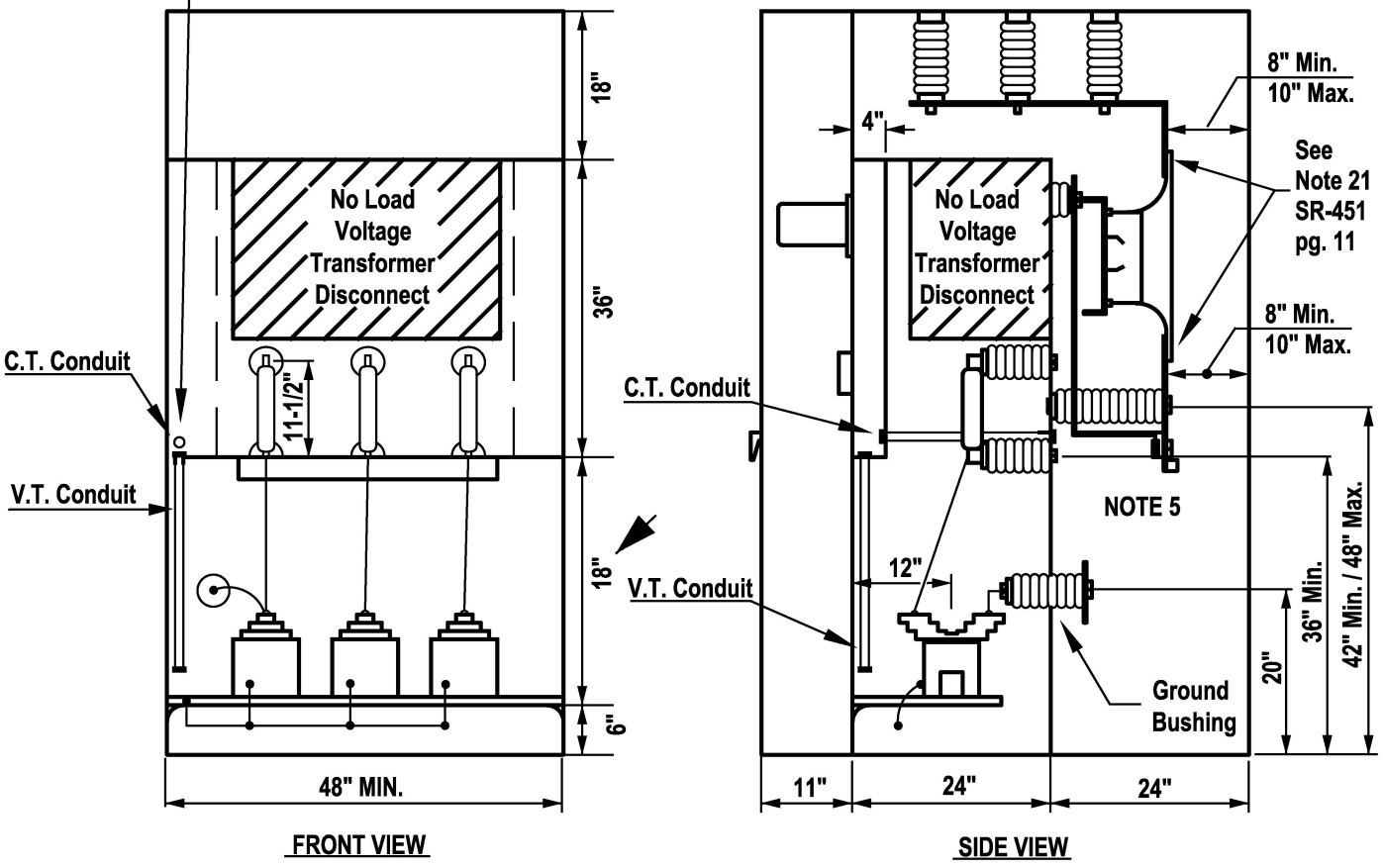

Tucson Electric Power / UniSourceEnergy Services SANTA CRUZ COUNTY	INITIATED BY	KR	REVISION NO.	8	SR-451 Pg. 8 of 12
	STANDARDS COMM.	10-88	STANDARDS COMM.	9-12	
			EFFECTIVE DATE	10-12	

PRIMARY METERED SERVICE
PAD-MOUNTED METERING
200-800 AMPS

ESERC DIG. NO. 407

1. Only copper and Alstan or Alstan 80 plated aluminum bus shall be used in the metering enclosure. Aluminum bus shall be identified with the plating process where the service cables are terminated and the current transformer are mounted.
   Note: At any time Design, Service Requirements & Service Delivery Department may require certification and supporting documentation of manufacturing process to meet electroplating thickness requirements.

2. Maximum bus size shall be 3/8 inch X 4 inches. Minimum bus size shall be 1/4 inch x 2 inches unless otherwise indicated on specific drawing. Bus size outside these limits require special engineering and consultation with Design, Service Requirements, and Service Delivery Department.

3. When the main switch or circuit breaker enclosure is adjacent to and on the source side of the metering enclosure, connections form the load side of the main switch or circuit breaker to the line side of the current transformers shall be made with bus bars.

4. Where cable or busses pass through compartment walls, through-the-wall bushings with full voltage rating of the switchboard must be used.

5. One landing terminal with two 1/2 inch steel bolts spaced on 1-3/4 inch vertical centers shall be provided on each phase and neutral bus. These bolts, 2 inches in length, shall be provided with nuts, flat washers and pressure maintaining spring washer. All parts shall be plated to prevent corrosion.

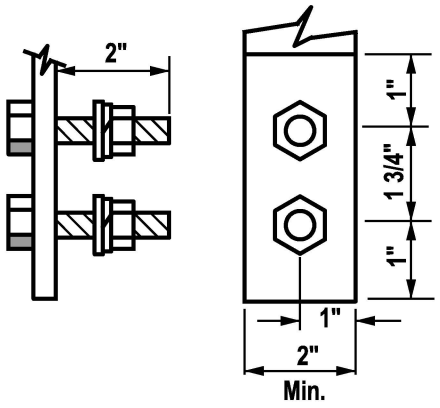

Landing Terminal Detail

6. Vertical bussing in the pull section and CT compartment shall be spaced 12" on centerlines between phases, and the center phase shall be on the enclosure centerline. BIL for this enclosure shall be not less than that for customer's associated switchgear.

7. Ventilation openings shall be provided as per NEMA Standards, and shall be louvered or screened and be guarded with internal barriers to prevent access to energized parts.

8. Bussed thru-wall insulators for phase and neutral VT taps to be furnished with lugs on VT compartment side. Cables or bus conductors may be furnished for the taps to the fuse carriage and to the VT compartment, maintaining bare bus clearance.

9. The neutral termination bus shall be insulated from the metering cubicle.

10. Provide VT and adjustable CT mounting bases. Bus drilling and spacing shall accommodate ampere rating of 15 kV Class CT's.

11. Kirk key (or equivalent) interlocking is required between the voltage transformer disconnect and the voltage transformer compartment door so that, for personnel safety, the voltage transformer compartment cannot be entered until the following conditions are met:

    a. The disconnect is fully and visibly open.

    b. When the voltage transformer disconnect is fully open the disconnect blades must ground automatically.

    c. The disconnect is locked open with a Kirk key interlock system.

12. The interlock system must prevent closing of the disconnect without first closing and locking the voltage transformer compartment door.

13. Primary contacts for the voltage disconnect shall be of the blade and jaw design or equivalent to insure continued adequate contact. Wiping or pressure contact is not acceptable. Operating handle or lever of the VT disconnect switch shall be padlockable in the closed position.

14. As an alternate, the meter panel may be mounted in front of the CT/Termination compartment, provided that when the meter panel is opened the compartment is fully isolated by a removable or hinged barrier. Customer to furnish and install 13 terminal meter sockets designed for back connection a test switch (Superior Cat. # 1058-F or exact equivalent), and a cover (Superior Cat. #7943BC or exact equivalent). Note: Test switch and cover not supplied by switchgear manufacturer. See also SR-431, SR-438, SR-414, page 2, fig. #2.

15. Compartments of the metering enclosure shall be permanently labeled with matching engraved laminated phenolic or equal tags, 1/4" white letters and numbers on the dark colored material which are readily visible and mechanically attached to the face of the following compartments:

    a. Utility Voltage Transformer (VT) Compartment.

    b. Utility Voltage Transformer (VT) Fuse Compartment.

    c. Utility Service Termination Compartment.

    d. Utility Metering Panel.

    e. In addition each panel of the switchgear shall be labeled, using at least 1" white letters and numbers, stating the utility serving voltage such as 13800Y/7970 volts.

Current and voltage transformers, meters and all secondary wiring from the transformers to the meters will be furnished and installed by TEP or Service Provider up to 25 KV. TEP installs exclusively over 25 KV.

PRIMARY METERED SERVICE
PAD-MOUNTED METERING
200-800 AMPS

16. Voltage transformer fuses shall be furnished and installed by TEP or Service Provider shall provide mounting clips for indoor current-limiting fuses, nominal voltage rating 14000, current range 0.5 to 0.3 amperes. The mounting clip separation shall be 11-1/2 inches on centers, fuse ferrule diameter 1-5/8 inches.

17. Equipment is shown with weatherproof door. The meter panel shall be hinged on the opposite side from the outer door on weatherproof units to permit 90 degree opening of both doors. Omit weatherproof door if outer door is omitted, furnish lockable meter panel. The front weatherproof door shall be a single door equipped with a latch type handle for TEP's padlock.

18. Refer to EUSERC Dwgs. No.'s 407, 411, & 414 for additional details.

19. The customer shall submit copies of the cabinet design drawings to TEP as required for approval prior to fabrication. Such drawings shall indicate the customer's name and the job address.

20. Pad size and duct placement for this enclosure requires plan review and approval by Design, Service Requirements and Service Delivery Department.

21. If the switchgear is rated for 1200 amps but the actual load is 600 amps or less the measurements for the current transformer mounting space shall be those in the 10-800 ampere column of the dimensions chart depicted in SR-451 pg. 12 of 12.

22. Working clearances at customer's job site may determine if the manufacturer is to furnish either a single or double, full height, hinged rear door access. In addition to provision for a three point locking mechanism with hardware for attachment of utility furnished padlock, each door shall, when closed, be secured in place with the standard "stud and wing-nut assembly" for sealing.

23. Instrument transformer compartment or cabinet shall be used solely for TEP equipment. The compartment or cabinet shall not be used as a raceway for customer load conductors, other service conductors, or any other customer equipment.

PRIMARY METERED SERVICE
INDOOR CT DIMENSIONS

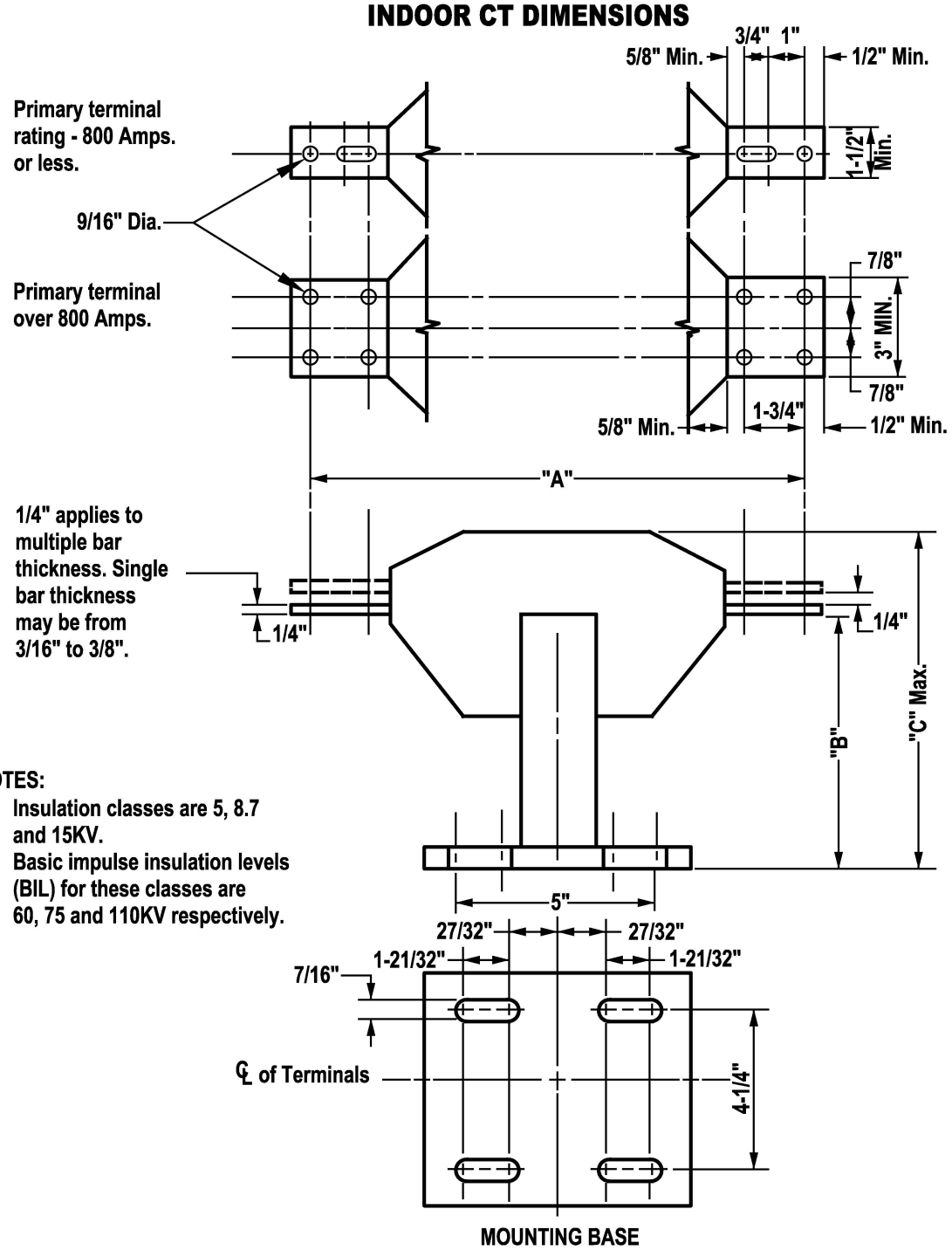

NOTES:

Insulation classes are 5, 8.7 and 15KV.
Basic impulse insulation levels (BIL) for these classes are 60, 75 and 110KV respectively.

DIMENSIONS - INCHES*						
INSULATION CLASS KV	"A" AMPERES		"B" AMPERES		"C" (Maximum) AMPERES	
	10-800	1200-2000	10-800	1200-2000	10-800	1200-2000
5.0	14	—	5-3/4	—	8	—
8.7	15	—	8	—	10-1/2	—
15.0	22	26	9	5-3/4	11-1/4	13

* Unless otherwise indicated tolerance, plus or minus 1/16 inch.

USE: Reference list to purchase or stock approved metering service equipment

APPROVED METERING AND SERVICE EQUIPMENT
Guidelines for Metering Equipment

Note:

This list is of approved manufacturer's meter sockets is indicative of many types of equipment that is acceptable but is not an exhaustive list of all possible acceptable versions manufactured by a particular company. The general guidelines for selecting meter equipment are:

0 to 200 amp single and three phase services for Self-Contained meter enclosures (meter sockets only, all in ones, multi-packs and pedestals,):

- Classified as EUSERC, UL and ANSI approved metering equipment
- AIC rating of 10,000 amps or greater
- "A" base or "K" base meter sockets are not approved (bar type / bolted in meters are not allowed)
- All sockets will be ring types (ringless sockets not allowed)
- Dual rated enclosure for Overhead and Underground usage are required, except as noted
- All non-residential services shall have manual means of bypassing (not applicable for non-occupied services) so businesses will not be affected when maintenance is performed.
- Manual link bypasses (lever bypasses and automatic bypasses not allowed)
- Safety Sockets will be utilized on any 480 volt services
- Breakers used as main disconnecting devices rather than fuses when fault interrupting capabilities are in compliance.
- Fused equipment approved on a case by case basis for retrofits or where a main breaker disconnects fault interrupting ratings would be exceeded.
- Multi-pack equipment with more than 4 sockets in height will not be accepted.

201 to 400 amp single and three phase services for Self-Contained meter enclosures (meter sockets only, all in ones, multi-packs, and pedestals,):

- Classified as EUSERC, UL and ANSI approved metering equipment
- AIC rating of 22,000 amps or greater
- "A" base or "K" base meter sockets are not approved (bar type meter are not allowed)
- All sockets will be ring types (ringless sockets not allowed)
- Dual rated enclosure for Overhead and Underground usage are required, except as noted
- All non-residential services shall have manual means of bypassing so businesses will not be affected when maintenance is performed
- Manual link bypasses (lever bypasses and automatic bypasses not allowed)
- 400 amp self-contained meter socket with manual link bypasses for single-phase only
- Safety Sockets will be utilized on any 480 volt services
- Breakers used as main disconnecting devices rather than fuses when fault interrupting capabilities are in compliance.
- Fused equipment approved on a case by case basis for retrofits or where a main breaker disconnects fault interrupting ratings would be exceeded.
- Multi-pack equipment with more than 4 sockets in height will not be accepted.

For approval of equipment not included in the approved list, contact Tucson Electric Power at (520) 918-8280. A factory representative shall provide product information and data sheets and a product sample for TEP in house review and approval. TEP will update and electronically publish the approved list on a quarterly basis during the months of January, April, July and October. It will be the responsibility of each panel manufacturer to notify TEP of any change of catalog number, specifications or if the panel is no longer available.

Tucson Electric Power

TEP

UniSourceEnergy SERVICES SANTA CRUZ COUNTY

INITIATED BY	REVISION NO.
ESR COMM.	GC
10-06	ESR COMM.
EFFECTIVE DATE	14
4-18	4-18

USE: Reference list to purchase or stock approved metering service equipment

APPROVED METERING AND SERVICE EQUIPMENT

TEP SR#	Type of Application	Size	Manufacturer	Catalog Number	Phase	Fault Rating	OH	UG	Terminals
SR-408	All-In-One	100	Eaton Cutler-Hammer	MBE1224B100BTF	1	10	X	X	4
SR-408	All-In-One	100	Eaton Cutler-Hammer	MBE1224B100BTS	1	10	X	X	4
SR-408	All-In-One	100	Eaton Cutler-Hammer	MBE1224B100TS	1	10	X		4
SR-408	All-In-One	100	Eaton Cutler-Hammer	MBE1224PV100BTF	1	10	X	X	4
SR-408	All-In-One	100	Eaton Cutler-Hammer	MBE1224PV100BTS	1	10	X	X	4
SR-408	All-In-One	100	GE	TSM1610CSCU	1	22	X	X	4
SR-408	All-In-One	100	Siemens	MC1020B1100SZ	1	22	X		4
SR-408	All-In-One	100	Siemens	MC1224B1100EFC	1	22	X	X	4
SR-408	All-In-One	100	Siemens	MC1224B1100ESC	1	22	X	X	4
SR-408	All-In-One	100	Siemens	MC1224B1100FEC	1	22	X	X	4
SR-408	All-In-One	100	Siemens	MC1224B1100SEC	1	22	X	X	4
SR-408	All-In-One	100	Square D	SC1624M100F	1	10	X	X	4
SR-408	All-In-One	100	Square D	SC1624M100S	1	10	X	X	4
SR-408	All-In-One	100	Square D	SO1020M100S	1	10	X		4
SR-408	All-In-One	100	Square D	SO1020M100VP	1	10	X		4
SR-408	All-In-One	125	Eaton Cutler-Hammer	CMBE2222B125BF	1	10		X	4
SR-408	All-In-One	125	Eaton Cutler-Hammer	CMBE2222B125BS	1	10		X	4
SR-408	All-In-One	125	Eaton Cutler-Hammer	MBE1224B125BTF	1	10	X	X	4
SR-408	All-In-One	125	Eaton Cutler-Hammer	MBE1224B125BTS	1	10	X	X	4
SR-408	All-In-One	125	Eaton Cutler-Hammer	MBE1224PV125BTF	1	10	X	X	4
SR-408	All-In-One	125	Eaton Cutler-Hammer	MBE1224PV125BTS	1	10	X	X	4
SR-408	All-In-One	125	GE	TSM1212CSCU	1	22	X	X	4
SR-408	All-In-One	125	Murray	JA1632B1125SEC	1	22	X	X	4
SR-408	All-In-One	125	Siemens	MC1224B1125EFC	1	22	X	X	4
SR-408	All-In-One	125	Siemens	MC1224B1125ESC	1	22	X	X	4
SR-408	All-In-One	125	Siemens	MC1224B1125FEC	1	22	X	X	4
SR-408	All-In-One	125	Siemens	MC1224B1125SEC	1	22	X	X	4
SR-408	All-In-One	125	Square D	SC1624M125F	1	10	X	X	4
SR-408	All-In-One	125	Square D	SC1624M125S	1	10	X	X	4
SR-408	All-In-One	150	Square D	SC816F150PS	1	22	X	X	4
SR-408	All-In-One	200	Eaton Cutler-Hammer	CMBE1212L200BF	1	10/22		X	4
SR-408	All-In-One	200	Eaton Cutler-Hammer	CMBE1212L200BS	1	10/22		X	4

♥ Test - Bypass Equipped

♦ The Cat. Number is out of date & will be removed the following year to allow stock out.

♫ The panel requires a HP40TFKIT kit to be purchased if this panel is to be served from overhead.

♣ New addition to the book.

Tucson Electric Power TEP UniSourceEnergy SERVICES SANTA CRUZ COUNTY

INITIATED BY	REVISION NO.
ESR COMM.	GC
10-06	14
ESR COMM.	4-18
EFFECTIVE DATE	4-18

SR-452
Pg. 3 of 14

USE: Reference list to purchase or stock approved metering service equipment

APPROVED METERING AND SERVICE EQUIPMENT

TEP SR#	Type of Application	Size	Manufacturer	Catalog Number	Phase	Fault Rating	OH	UG	Terminals
SR-408	All-In-One	200	Eaton Cutler-Hammer	CMBE1212L200TS	1	10/22	X		4
SR-408	All-In-One	200	Eaton Cutler-Hammer	CMBE24B200TSR	1	35	X		4
SR-408	All-In-One	200	Eaton Cutler-Hammer	CMBE4242B200BS2	1	35		X	4
SR-408	All-In-One	200	Eaton Cutler-Hammer	CMBE4242B200BTF	1	22	X	X	4
SR-408	All-In-One	200	Eaton Cutler-Hammer	CMBE4242B200BTS	1	22	X	X	4
SR-408	All-In-One	200	Eaton Cutler-Hammer	CMBE4242B200TS	1	35	X		4
SR-408	All-In-One	200	Eaton Cutler-Hammer	CMBE4242PV200BS	1	22	X	X	4
SR-408	All-In-One	200	Eaton Cutler-Hammer	CMBE4242PV200TS	1	22	X		4
SR-408	All-In-One	200	Eaton Cutler-Hammer	CMBE88B200BTF	1	22	X	X	4
SR-408	All-In-One	200	Eaton Cutler-Hammer	CMBE88B200BTS	1	22	X	X	4
SR-408	All-In-One	200	Eaton Cutler-Hammer	HP404040SH-PV	1	10/25		X	4
SR-408	All-In-One	200	Eaton Cutler-Hammer	HP404040SHA-PV ♥	1	10/25		X	4
SR-408	All-In-One	200	Eaton Cutler-Hammer	MBE1212L200BF	1	10/22		X	4
SR-408	All-In-One	200	Eaton Cutler-Hammer	MBE1212L200BS	1	10/22		X	4
SR-408	All-In-One	200	Eaton Cutler-Hammer	MBE2040B200BTS	1	10	X	X	4
SR-408	All-In-One	200	Eaton Cutler-Hammer	MBE2040B200TS	1	10	X		4
SR-408	All-In-One	200	Eaton Cutler-Hammer	MBE2040PV200BTF	1	22	X	X	4
SR-408	All-In-One	200	Eaton Cutler-Hammer	MBE2040PV200BTS	1	22	X	X	4
SR-408	All-In-One	200	Eaton Cutler-Hammer	MBE4040B200BTF	1	22		X	4
SR-408	All-In-One	200	Eaton Cutler-Hammer	MBE4040B200BTS	1	22		X	4
SR-408	All-In-One	200	Eaton Cutler-Hammer	MBE4040B200TS	1	10	X		4
SR-408	All-In-One	200	Eaton Cutler-Hammer	MBE4040PV200BTF	1	22		X	4
SR-408	All-In-One	200	Eaton Cutler-Hammer	MBE4040PV200BTS	1	22		X	4
SR-408	All-In-One	200	Eaton Cutler-Hammer	MBE88B200BTF	1	10/22	X	X	4
SR-408	All-In-One	200	Eaton Cutler-Hammer	MBE88B200BTS	1	10/22	X	X	4
SR-408	All-In-One	200	GE	TSM2020CSCU	1	22	X	X	4
SR-408	All-In-One	200	GE	TSM2420UF42	1	22		X	4
SR-408	All-In-One	200	GE	TSM2420US42	1	22		X	4
SR-408	All-In-One	200	GE	TSM3220UFCU	1	22		X	4
SR-408	All-In-One	200	GE	TSM3220UWCU	1	22		X	4
SR-408	All-In-One	200	GE	TSM4020UWCU	1	22		X	4
SR-408	All-In-One	200	Murray	JA1212L1200FED	1	22		X	4
SR-408	All-In-One	200	Murray	JA1212L1200SED	1	22		X	4
SR-408	All-In-One	200	Murray	JC0406L1200H	1	22	X	X	4

♥ Test - Bypass Equipped

♦ The Cat. Number is out of date & will be removed the following year to allow stock out.

♫ The panel requires a HP40TFKIT kit to be purchased if this panel is to be served from overhead.

♣ New addition to the book.

USE: Reference list to purchase or stock approved metering service equipment

APPROVED METERING AND SERVICE EQUIPMENT

TEP SR#	Type of Application	Size	Manufacturer	Catalog Number	Phase	Fault Rating	OH	UG	Terminals
SR-408	All-In-One	200	Siemens	MC0816B1200EST	1	22	X	X	4
SR-408	All-In-One	200	Siemens	MC0816B1200T ♣	1	22	X		4
SR-408	All-In-One	200	Siemens	MC0816S1200SCT	1	22	X	X	4
SR-408	All-In-One	200	Siemens	MC1212L1200FED	1	22		X	4
SR-408	All-In-One	200	Siemens	MC1212L1200SED	1	22		X	4
SR-408	All-In-One	200	Siemens	MC2040B1200EFC	1	22	X	X	4
SR-408	All-In-One	200	Siemens	MC2040B1200ESC	1	22	X	X	4
SR-408	All-In-One	200	Siemens	MC2040B1200F	1	22	X		4
SR-408	All-In-One	200	Siemens	MC2040B1200FED	1	22		X	4
SR-408	All-In-One	200	Siemens	MC2040B1200S	1	22	X		4
SR-408	All-In-One	200	Siemens	MC2040B1200SED	1	22		X	4
SR-408	All-In-One	200	Siemens	MC2040B1200SZ	1	22	X		4
SR-408	All-In-One	200	Siemens	MC2442B1200EFC	1	22	X	X	4
SR-408	All-In-One	200	Siemens	MC2442B1200ESC	1	22	X	X	4
SR-408	All-In-One	200	Siemens	MC2442B1200ESV	1	22	X	X	4
SR-408	All-In-One	200	Siemens	MC2442B1200FEC	1	22	X	X	4
SR-408	All-In-One	200	Siemens	MC2442B1200SEC	1	22	X	X	4
SR-408	All-In-One	200	Siemens	MC2442S1200FC	1	22	X	X	4
SR-408	All-In-One	200	Siemens	MC2442S1200SC	1	22	X	X	4
SR-408	All-In-One	200	Siemens	MC3040B1200SECW	1	22	X	X	4
SR-408	All-In-One	200	Siemens	MC3040S1200SC	1	22	X	X	4
SR-408	All-In-One	200	Siemens	MC3042B1200FED	1	22		X	4
SR-408	All-In-One	200	Siemens	MC3042B1200SED	1	22		X	4
SR-408	All-In-One	200	Square D	MC4040B1200SECW	1	22	X	X	4
SR-408	All-In-One	200	Siemens	MC4040S1200SC	1	22	X	X	4
SR-408	All-In-One	200	Square D	SC2040M200C	1	10	X	X	4
SR-408	All-In-One	200	Square D	SC2040M200F	1	22		X	4
SR-408	All-In-One	200	Square D	SC2040M200PS	1	22	X	X	4
SR-408	All-In-One	200	Square D	SC2040M200S	1	22	X	X	4
SR-408	All-In-One	200	Square D	SC3040M200F	1	22		X	4
SR-408	All-In-One	200	Square D	SC3040M200S	1	22	X	X	4
SR-408	All-In-One	200	Square D	SC3042M200PS	1	22	X	X	4
SR-408	All-In-One	200	Square D	SC40M200S	1	22	X	X	4
SR-408	All-In-One	200	Square D	SC40M200SA250LH	1	22	X	X	4

♥ Test - Bypass Equipped

♦ The Cat. Number is out of date & will be removed the following year to allow stock out.

♫ The panel requires a HP40TFKIT kit to be purchased if this panel is to be served from overhead.

♣ New addition to the book.

Tucson Electric Power

TEP UniSourceEnergy SERVICES SANTA CRUZ COUNTY

INITIATED BY	REVISION NO.
ESR COMM.	GC
10-06	16
ESR COMM.	4-18
EFFECTIVE DATE	4-18

SR-452

USE: Reference list to purchase or stock approved metering service equipment

APPROVED METERING AND SERVICE EQUIPMENT

TEP SR#	Type of Application	Size	Manufacturer	Catalog Number	Phase	Fault Rating	OH	UG	Terminals
SR-408	All-In-One	200	Square D	SC42M200PS	1	22	X	X	4
SR-408	All-In-One	200	Square D	SC816F200PS	1	22	X	X	4
SR-408	All-In-One	200	Square D	SO2040M200S	1	22	X		4
SR-408	All-In-One	200	Square D	SO2040M200VP	1	22	X		4
SR-408	All-In-One	200	Square D	SU3040M200R	1	10		X	4
SR-408	All-In-One	200	Siemens	MC2040S1200SZ	1	22	X		4
SR-408	All-In-One	250	Siemens	MC0816B1200ESN	1	22	X	X	4
SR-412	All-In-One	300	Eaton Cutler-Hammer	HP304040SH ♫	1	22		X	4
SR-412	All-In-One	300	Siemens	MC3040MB21	1	22		X	4
SR-412	All-In-One	320	Milbank	M400-APS	1	10	X	X	4
SR-412	All-In-One	320	Milbank	U3251-0-200-CB	1	10		X	4
SR-412	All-In-One	400	Eaton Cutler-Hammer	CG1212P400BS	1	22		X	4
SR-412	All-In-One	400	Eaton Cutler-Hammer	CG403242SH ♫	1	22		X	4
SR-412	All-In-One	400	Eaton Cutler-Hammer	CG40SH ♫	1	22		X	4
SR-412	All-In-One	400	Eaton Cutler-Hammer	H816P400BS ♫	1	10/22		X	4
SR-412	All-In-One	400	Eaton Cutler-Hammer	H816P400BS(HPPR) ♫	1	10/22		X	4
SR-412	All-In-One	400	Eaton Cutler-Hammer	HP40 ♫	1	10/22		X	4
SR-412	All-In-One	400	Eaton Cutler-Hammer	HP40(HPPR) ♫	1	10/22		X	4
SR-412	All-In-One	400	Eaton Cutler-Hammer	HP402442 ♫	1	10/22		X	4
SR-412	All-In-One	400	Eaton Cutler-Hammer	HP404040SH ♫	1	10/22		X	4
SR-412	All-In-One	400	Eaton Cutler-Hammer	HP404040SHA ♫ ♥	1	10/22		X	4
SR-412	All-In-One	400	Eaton Cutler-Hammer	HP40SH ♫	1	10/22		X	4
SR-412	All-In-One	400	GE	TMH2440RMS	1	22		X	4
SR-412	All-In-One	400	GE	TSDA2440UC42	1	22		X	4
SR-412	All-In-One	400	Murray	JA0816B1400SCS ♥	1	22	X	X	4
SR-412	All-In-One	400	Murray	JA3042B1400SCS ♥	1	10	X	X	4
SR-412	All-In-One	400	Murray	JC0404L1400SCS ♥	1	22	X	X	4
SR-412	All-In-One	400	Siemens	MC2442B1400SD ♥	1	22		X	4
SR-412	All-In-One	400	Siemens	MC3040MB22	1	22		X	4
SR-412	All-In-One	400	Siemens	MC3042B1400FD	1	22		X	4
SR-412	All-In-One	400	Siemens	MC3042B1400SD	1	22		X	4
SR-412	All-In-One	400	Siemens	MC3042B1200SPV	1	22		X	4
SR-412	All-In-One	400	Siemens	MC3042S1400SC ♥	1	22	X	X	4

♥ Test - Bypass Equipped

♦ The Cat. Number is out of date & will be removed the following year to allow stock out.

♫ The panel requires a HP40TFKIT kit to be purchased if this panel is to be served from overhead.

♣ New addition to the book.

Tucson Electric Power TEP UniSourceEnergy SERVICES SANTA CRUZ COUNTY

INITIATED BY	REVISION NO.
ESR COMM.	GC
10-06	16
ESR COMM. EFFECTIVE DATE	4-18
4-18	

SR-452

USE: Reference list to purchase or stock approved metering service equipment

APPROVED METERING AND SERVICE EQUIPMENT

TEP SR#	Type of Application	Size	Manufacturer	Catalog Number	Phase	Fault Rating	OH	UG	Terminals
SR-412	All-In-One	400	Siemens	MC3042S1400FC	1	22	X	X	4
SR-412	All-In-One	400	Siemens	MC3042S1400SD	1	22		X	4
SR-412	All-In-One	400	Siemens	MC3042S1400FD	1	22		X	4
SR-412	Commercial Meter Main Combo	400	Siemens	MM0404L1400SCS ♥	1	22	X	X	4
SR-412	All-In-One	400	Square D	SU3040D400CN	1	25		X	4
SR-410	Commercial All-In-One	100	Milbank	U214MTBL	1	10	X	X	4
SR-410	Commercial All-In-One	100	Milbank	U217MTBL	3	10	X	X	7
SR-410	Commercial All-In-One	100	Murray	MM0202F1100CEY ♥	1	100	X	X	4
SR-410	Commercial All-In-One	100	Murray	MM0202L1100EY ♥	1	65	X		4
SR-410	Commercial All-In-One	100	Murray	MM0303F3100CEY ♥	3	100	X	X	7
SR-410	Commercial All-In-One	100	Murray	MM0303L3100EY ♥	3	65	X		7
SR-410	Commercial All-In-One	100	Siemens	MC1224B1100CESS ♥	1	10 to 65	X	X	4
SR-410	Commercial All-In-One	200	Milbank	U224MTBL	1	10	X	X	4
SR-410	Commercial All-In-One	200	Milbank	U227MTBL	3	10	X	X	7
SR-410	Commercial All-In-One	200	Murray	MM0202L1200CEY ♥	1	35	X	X	4
SR-410	Commercial All-In-One	200	Murray	MM0303F3200CEY ♥	3	100	X	X	7
SR-410	Commercial All-In-One	200	Murray	MM0303L3200CEY ♥	1	35	X	X	7
SR-410	Commercial All-In-One	200	Siemens	MC2440B1200CEY	1	10 to 22	X	X	4
SR-410	Commercial All-In-One	200	Siemens	MC2440B1200CESS ♥	1	10 to 65	X	X	4
SR-410	Commercial All-In-One	200	Talon	MM0202L1200CEY	1	35	X	X	4
SR-410	Commercial All-In-One	200	Talon	MM0202L1200EY	1	35	X		4
SR-412	Commercial All-In-One	320	Murray	BY1451GL ♥	1	22		X	4
SR-412	Commercial All-In-One	320	Murray	BY1455GL ♥	1	22		X	4
SR-412	Commercial All-In-One	320	Siemens	MC3040MB21SS ♥	1	22		X	4
SR-412	Commercial All-In-One	320	Siemens	MC3040MB22SS ♥	1	22		X	4
SR-412	Commercial All-In-One	400	Siemens	MC0816B1400SCS ♥	1	22	X	X	4
SR-412	Commercial All-In-One	400	Siemens	MC3042B1400SCS ♥	1	22	X	X	4
SR-412	Commercial All-In-One	400	Siemens	MC3042B1400SC	1	22	X	X	4
SR-410	Commercial Meter Main Combo	100	Cooper B-Line	U214MTB	1	10	X	X	4
SR-410	Commercial Meter Main Combo	100	Cooper B-Line	U215MTB	3	10	X	X	5
SR-410	Commercial Meter Main Combo	100	Cooper B-Line	U217MTB	3	10	X	X	7
SR-410	Commercial Meter Main Combo	100	Milbank	U214MTB	1	10	X	X	4
SR-410	Commercial Meter Main Combo	100	Milbank	U214MTB-48	1	14	X	X	4

♥ Test - Bypass Equipped

♦ The Cat. Number is out of date & will be removed the following year to allow stock out.

♫ The panel requires a HP40TFKIT kit to be purchased if this panel is to be served from overhead.

♣ New addition to the book.

Tucson Electric Power TEP UniSourceEnergy SERVICES SANTA CRUZ COUNTY

INITIATED BY	REVISION NO.
ESR COMM.	GC
4-07	ESR COMM.
EFFECTIVE DATE	15
4-18	4-18

USE: Reference list to purchase or stock approved metering service equipment

APPROVED METERING AND SERVICE EQUIPMENT

TEP SR#	Type of Application	Size	Manufacturer	Catalog Number	Phase	Fault Rating	OH	UG	Terminals
SR-410	Commercial Meter Main Combo	100	Milbank	U217MTB	3	10	X	X	7
SR-410	Commercial Meter Main Combo	100	Milbank	U217MTB-48	3	14	X	X	7
SR-410	Commercial Meter Main Combo	100	Siemens	MM0202L1100ESS ♥	1	10 to 100	X		4
SR-410	Commercial Meter Main Combo	100	Siemens	MM0202L3100ESS ♥	3	10 to 100	X		7
SR-410	Commercial Meter Main Combo	200	Cooper B-Line	U224MTB	1	10	X	X	4
SR-410	Commercial Meter Main Combo	200	Cooper B-Line	U225MTB	3	10	X	X	5
SR-410	Commercial Meter Main Combo	200	Cooper B-Line	U227MTB	3	10	X	X	7
SR-410	Commercial Meter Main Combo	200	Milbank	U224MTB	1	10	X	X	4
SR-410	Commercial Meter Main Combo	200	Milbank	U224MTB-48	1	14	X	X	4
SR-410	Commercial Meter Main Combo	200	Milbank	U227MTB	3	10	X	X	7
SR-410	Commercial Meter Main Combo	200	Milbank	U227MTB-48	3	14	X	X	7
SR-410	Commercial Meter Main Combo	200	Siemens	MM0202L1200CESS ♥	1	10 to 100	X	X	4
SR-410	Commercial Meter Main Combo	200	Siemens	MM0202L3200CESS ♥	3	10 to 100	X	X	7
SR-410	Commercial Meter Main Combo	200	Square D	EMT1225CB	1	100	X	X	5
SR-410	Commercial Meter Main Combo	200	Square D	EMT3225CB	1	100	X	X	7
SR-412	Commercial Meter Main Combo	400	Siemens	MM0404L1400SCS ♥	1	22	X	X	4
SR-418	Commercial Meter Pak	200	Myers/Ryco	WSM12-3	3	65		X	7
SR-410	Commercial Meter Socket Only	100	Cooper B-Line	114TB	1	100	X	X	4
SR-410	Commercial Meter Socket Only	100	Cooper B-Line	115TB	3	100	X	X	5
SR-410	Commercial Meter Socket Only	100	Cooper B-Line	117TB	3	100	X	X	7
SR-408	Commercial Meter Socket Only	100	Murray	MS14TB ♥	1	100	X	X	4
SR-408	Commercial Meter Socket Only	100	Murray	MS15TB ♥	3	100	X	X	5
SR-408	Commercial Meter Socket Only	100	Murray	MS17TB ♥	3	100	X	X	7
SR-410	Commercial Meter Socket Only	100	Siemens	MS14TB ♥	1	10 to 100	X	X	4
SR-410	Commercial Meter Socket Only	100	Siemens	MS15TB ♥	3	10 to 100	X	X	5
SR-410	Commercial Meter Socket Only	100	Siemens	MS17TB ♥	3	10 to 100	X	X	7
SR-410	Commercial Meter Socket Only	200	Cooper B-Line	124TB	1	22	X	X	4
SR-410	Commercial Meter Socket Only	200	Cooper B-Line	125TB	3	22	X	X	5
SR-410	Commercial Meter Socket Only	200	Cooper B-Line	127TB	3	22	X	X	7
SR-408	Commercial Meter Socket Only	200	Murray	MS24TB ♥	1	100	X	X	4
SR-408	Commercial Meter Socket Only	200	Murray	MS25TB ♥	3	100	X	X	5
SR-408	Commercial Meter Socket Only	200	Murray	MS27TB ♥	3	100	X	X	7
SR-410	Commercial Meter Socket Only	200	Siemens	MS24TB ♥	1	10 to 100	X	X	4

♥ Test - Bypass Equipped

♦ The Cat. Number is out of date & will be removed the following year to allow stock out.

♫ The panel requires a HP40TFKIT kit to be purchased if this panel is to be served from overhead.

♣ New addition to the book.

Tucson Electric Power

TEP UniSourceEnergy SERVICES SANTA CRUZ COUNTY

INITIATED BY	GC
ESR COMM.	4-07

REVISION NO.	16
ESR COMM.	4-18
EFFECTIVE DATE	4-18

USE: Reference list to purchase or stock approved metering service equipment

APPROVED METERING AND SERVICE EQUIPMENT

TEP SR#	Type of Application	Size	Manufacturer	Catalog Number	Phase	Fault Rating	OH	UG	Terminals
SR-410	Commercial Meter Socket Only	200	Siemens	MS25TB ♥	3	10 to 100	X	X	5
SR-410	Commercial Meter Socket Only	200	Siemens	MS27TB ♥	3	10 to 100	X	X	7
SR-410	Commercial Meter Socket Only	200	Eaton Cutler-Hammer	35SS120RAB ♥	3	100			5
SR-410	Commercial Meter Socket Only	200	Eaton Cutler-Hammer	35SS120RAC ♥	3	100			5
SR-410	Commercial Meter Socket Only	200	Eaton Cutler-Hammer	35SS120RBC ♥	3	100			5
SR-410	Commercial Meter Socket Only	200	Eaton Cutler-Hammer	35SS220RAB ♥	3	100			5
SR-410	Commercial Meter Socket Only	200	Eaton Cutler-Hammer	35SS220RAC ♥	3	100			5
SR-410	Commercial Meter Socket Only	200	Eaton Cutler-Hammer	35SS220RBC ♥	3	100			5
SR-410	Commercial Meter Socket Only	200	Eaton Cutler-Hammer	35SS320RAB ♥	3	100			5
SR-410	Commercial Meter Socket Only	200	Eaton Cutler-Hammer	35SS320RAC ♥	3	100			5
SR-410	Commercial Meter Socket Only	200	Eaton Cutler-Hammer	35SS320RBC ♥	3	100			5
SR-410	Commercial Meter Socket Only	200	Eaton Cutler-Hammer	37SS120R ♥	3	100			7
SR-410	Commercial Meter Socket Only	200	Eaton Cutler-Hammer	37SS220R ♥	3	100			7
SR-410	Commercial Meter Socket Only	200	Eaton Cutler-Hammer	37SS320R ♥	3	100			7
SR-418	Commercial Meter Socket Only	200	Square D	EZMT111225	1	100			4
SR-418	Commercial Meter Socket Only	200	Square D	EZMT112225	1	100			4
SR-418	Commercial Meter Socket Only	200	Square D	EZMT311225	3	100			5
SR-418	Commercial Meter Socket Only	200	Square D	EZMT312225	3	100			5
SR-418	Commercial Meter Socket Only	200	Square D	EZMT331225	3	100			7
SR-418	Commercial Meter Socket Only	200	Square D	EZMT332225	3	100			7
SR-409	Commercial Pedestal	100	Cooper B-Line	CMP4111MC-1	1	10		X	4
SR-409	Commercial Pedestal	100	Cooper B-Line	CMP4111MCH-1	1	10		X	4
SR-409	Commercial Pedestal	100	Cooper B-Line	CMP4411MC-1	3	10		X	7
SR-409	Commercial Pedestal	100	Cooper B-Line	CMP4411MCH-1	3	10		X	7
SR-409	Commercial Pedestal	100	Emerson	4PE24MEBBRRY3MEZ1	1	42		X	4
SR-409	Commercial Pedestal	100	Emerson	4PE24MEBDERY3MEZ1	1	42		X	4
SR-409	Commercial Pedestal	100	Milbank	CP3B11115A22	1	22		X	4
SR-409	Commercial Pedestal	100	Milbank	CP3B11119A22	1	22		X	4
SR-409	Commercial Pedestal	100	Milbank	CP3B11119B22	1	22		X	4
SR-409	Commercial Pedestal	100	Milbank	CP3B11513A22	3	22		X	7
SR-409	Commercial Pedestal	100	Milbank	CP3B13115AW	1	10		X	4
SR-409	Commercial Pedestal	100	Myers/Ryco	MEUG16-M100	1	10		X	4
SR-409	Commercial Pedestal	100	Myers/Ryco	MEUG20-M100	1	10		X	4

♥ Test - Bypass Equipped

♦ The Cat. Number is out of date & will be removed the following year to allow stock out.

♫ The panel requires a HP40TFKIT kit to be purchased if this panel is to be served from overhead.

♣ New addition to the book.

Tucson Electric Power TEP UniSourceEnergy SERVICES SANTA CRUZ COUNTY

INITIATED BY	REVISION NO.
ESR COMM.	GC
4-07	ESR COMM.
EFFECTIVE DATE	16
4-18	SR-452
	Pg. 9 of 14

USE: Reference list to purchase or stock approved metering service equipment

APPROVED METERING AND SERVICE EQUIPMENT

TEP SR#	Type of Application	Size	Manufacturer	Catalog Number	Phase	Fault Rating	OH	UG	Terminals
SR-409	Commercial Pedestal	100	Myers/Ryco	MEUG24-PB-M100	1	10		X	4
SR-409	Commercial Pedestal	100	Myers/Ryco	MEUG26-060-CTV	1	22		X	4
SR-409	Commercial Pedestal	100	Myers/Ryco	MEUG35-PB-M100	1	10		X	4
SR-409	Commercial Pedestal	100	Myers/Ryco	MEUG35-UPS-M100	1	10		X	4
SR-409	Commercial Pedestal	100	Myers/Ryco	MEUG46-M100	1	10		X	4
SR-409	Commercial Pedestal	100	Pacific Utility Products	USP16-M2100-112CTB-TUC	1	10		X	4
SR-409	Commercial Pedestal	100	Strong Box	CSP-116-10K	1	10		X	4
SR-409	Commercial Pedestal	100	TESCO	11-000	1	10		X	4
SR-409	Commercial Pedestal	100	TESCO	11-000	1 or 3	10		X	5
SR-409	Commercial Pedestal	100	TESCO	24-200	1	10		X	4
SR-409	Commercial Pedestal	100	TESCO	26-000	1	10		X	4
SR-409	Commercial Pedestal	100	TESCO	26-000	1 or 3	10		X	5
SR-409	Commercial Pedestal	100	TESCO	26-100	1	10		X	4
SR-409	Commercial Pedestal	100	TESCO	26-100	1 or 3	10		X	5
SR-409	Commercial Pedestal	100	TESCO	27-000	1	10		X	4
SR-409	Commercial Pedestal	100	TESCO	27-100	1	10		X	4
SR-409	Commercial Pedestal	100	TESCO	28-102	1	10		X	4
SR-409	Commercial Pedestal	100	TESCO	28-105	1	10		X	4
SR-409	Commercial Pedestal	125	ALPHA	UPE-M3	1	10		X	4
SR-409	Commercial Pedestal	125	ALPHA	UPE-M6	1	10		X	4
SR-409	Commercial Pedestal	125	ALPHA	UPE-M8	1	10		X	4
SR-409	Commercial Pedestal	125	Milbank	CP3B13115A22	1	22		X	4
SR-409	Commercial Pedestal	125	Myers/Ryco	MEUG16-M125-B2448-AZ	1	14		X	4
SR-409	Commercial Pedestal	125	Myers/Ryco	MEUG16-M200	1	10		X	4
SR-409	Commercial Pedestal	200	Cooper B-Line	CMP4121MC-1	1	10		X	4
SR-409	Commercial Pedestal	200	Cooper B-Line	CMP4121MCH-1	1	10		X	4
SR-409	Commercial Pedestal	200	Cooper B-Line	CMP4421MC-1	3	10		X	7
SR-409	Commercial Pedestal	200	Cooper B-Line	CMP4421MCH-1	3	10		X	7
SR-409	Commercial Pedestal	200	Milbank	CP3B12115A22	1	22		X	4
SR-409	Commercial Pedestal	200	Milbank	CP3B12119A22	1	22		X	4
SR-409	Commercial Pedestal	200	Milbank	CP3B12513A22	3	22		X	7
SR-409	Commercial Pedestal	200	Myers/Ryco	MEUG16-M125	1	10		X	4
SR-409	Commercial Pedestal	200	Myers/Ryco	MEUG16-M200-1220	3	42		X	7
SR-409	Commercial Pedestal	200	Myers/Ryco	MEUG16-M200-B2748	3	35		X	7
SR-409	Commercial Pedestal	200	Myers/Ryco	MEUG20-M200	1	10		X	4

♥ Test - Bypass Equipped

♦ The Cat. Number is out of date & will be removed the following year to allow stock out.

♫ The panel requires a HP40TFKIT kit to be purchased if this panel is to be served from overhead.

♣ New addition to the book.

Tucson Electric Power TEP UniSourceEnergy SERVICES SANTA CRUZ COUNTY

INITIATED BY	REVISION NO.
ESR COMM.	GC
4-07	16
ESR COMM.	4-18
EFFECTIVE DATE	4-18

SR-452
Pg. 10 of 14

USE: Reference list to purchase or stock approved metering service equipment

APPROVED METERING AND SERVICE EQUIPMENT

TEP SR#	Type of Application	Size	Manufacturer	Catalog Number	Phase	Fault Rating	OH	UG	Terminals
SR-409	Commercial Pedestal	200	Myers/Ryco	MEUG35-UPS-M200	1	10		X	4
SR-409	Commercial Pedestal	200	Myers/Ryco	MEUG46-M200	1	10		X	4
SR-409	Commercial Pedestal	200	Myers/Ryco	MEUG46-M200-2748	3	14		X	7
SR-409	Commercial Pedestal	200	TESCO	24-102	1 or 3	10		X	5
SR-409	Commercial Pedestal	200	TESCO	24-200	3	10		X	7
SR-409	Commercial Pedestal	200	TESCO	24-200	1 or 3	10		X	5
SR-409	Commercial Pedestal	200	TESCO	27-000	3	10		X	7
SR-409	Commercial Pedestal	200	TESCO	27-000	1 or 3	10		X	5
SR-409	Commercial Pedestal	200	TESCO	27-100	3	10		X	7
SR-409	Commercial Pedestal	200	TESCO	27-100	1 or 3	10		X	5
SR-409	Commercial Pedestal	200	TESCO	28-102	3	10		X	7
SR-409	Commercial Pedestal	200	TESCO	28-105	3	10		X	7
SR-409	Commercial Pedestal	200	TESCO	28-105	1 or 3	10		X	5
SR-408	Meter Main Combo	100	Cooper B-Line	1M1R	1	10	X		4
SR-408	Meter Main Combo	100	Cooper B-Line	1M1RF	1	10	X		4
SR-408	Meter Main Combo	100	Cooper B-Line	1M1RP	1	10	X		4
SR-408	Meter Main Combo	100	Cooper B-Line	1M1RPF	1	10	X		4
SR-408	Meter Main Combo	100	Cooper B-Line	U1M1R	1	10		X	4
SR-408	Meter Main Combo	100	Cooper B-Line	U1M1RF	1	10		X	4
SR-408	Meter Main Combo	100	Milbank	U3424-RL-100	1	10	X		4
SR-408	Meter Main Combo	100	Milbank	U3564-0-100	1	10		X	4
SR-408	Meter Main Combo	100	Siemens	MM0202B1100ESC	1	22	X	X	4
SR-408	Meter Main Combo	125	Eaton Cutler-Hammer	CMBE24L125BTF	1	10/22	X	X	4
SR-408	Meter Main Combo	125	Eaton Cutler-Hammer	CMBE24L125BTS	1	10/22	X	X	4
SR-408	Meter Main Combo	125	Eaton Cutler-Hammer	MBE24L125BTF	1	10	X	X	4
SR-408	Meter Main Combo	125	Eaton Cutler-Hammer	MBE24L125BTS	1	10	X	X	4
SR-408	Meter Main Combo	125	GE	TSL412CSCU	1	22	X	X	4
SR-408	Meter Main Combo	125	Siemens	MM0202L1125EFC	1	22	X	X	4
SR-408	Meter Main Combo	125	Siemens	MM0202L1125ESC	1	22	X	X	4
SR-408	Meter Main Combo	125	Siemens	MM0406L1125FEC	1	22	X	X	4
SR-408	Meter Main Combo	125	Siemens	MM0406L1125SEC	1	22	X	X	4
SR-408	Meter Main Combo	125	Square D	SC8L125S	1	10	X	X	4
SR-408	Meter Main Combo	150	Siemens	MM0202B1150	1	22	X		4
SR-408	Meter Main Combo	200	Cooper B-Line	2M25R	1	10	X		4
SR-408	Meter Main Combo	200	Cooper B-Line	2M25RF	1	10	X		4

♥ Test - Bypass Equipped

♦ The Cat. Number is out of date & will be removed the following year to allow stock out.

♫ The panel requires a HP40TFKIT kit to be purchased if this panel is to be served from overhead.

♣ New addition to the book.

Tucson Electric Power TEP UniSourceEnergy SERVICES SANTA CRUZ COUNTY

INITIATED BY	REVISION NO.
ESR COMM.	GC
4-07	ESR COMM.
EFFECTIVE DATE	16
4-18	4-18

USE: Reference list to purchase or stock approved metering service equipment

APPROVED METERING AND SERVICE EQUIPMENT

TEP SR#	Type of Application	Size	Manufacturer	Catalog Number	Phase	Fault Rating	OH	UG	Terminals
SR-408	Meter Main Combo	200	Cooper B-Line	2M2RP	1	10	X		4
SR-408	Meter Main Combo	200	Cooper B-Line	2M2RPF	1	10	X		4
SR-408	Meter Main Combo	200	Cooper B-Line	U2M25R	3	10		X	4
SR-408	Meter Main Combo	200	Cooper B-Line	U2M2RP	1 or 3	10		X	4
SR-408	Meter Main Combo	200	Eaton Cutler-Hammer	CMBE24L200BTF	3	10/22	X	X	4
SR-408	Meter Main Combo	200	Eaton Cutler-Hammer	CMBE24L200BTS	1 or 3	10/22	X	X	4
SR-408	Meter Main Combo	200	Eaton Cutler-Hammer	CMBEB200BTF	3	22	X	X	4
SR-408	Meter Main Combo	200	Eaton Cutler-Hammer	CMBEB200BTS	1 or 3	22	X	X	4
SR-408	Meter Main Combo	200	Eaton Cutler-Hammer	MBE24L200BTF	3	10	X	X	4
SR-408	Meter Main Combo	200	Eaton Cutler-Hammer	MBE24L200BTS	1 or 3	10	X	X	4
SR-408	Meter Main Combo	200	Eaton Cutler-Hammer	MBEB200BTF	3	10	X	X	4
SR-408	Meter Main Combo	200	Eaton Cutler-Hammer	MBEB200BTS	3	10	X	X	4
SR-408	Meter Main Combo	200	GE	TSL420CSCU	1 or 3	22	X	X	4
SR-408	Meter Main Combo	200	Milbank	U3584-0-200	1	10		X	4
SR-408	Meter Main Combo	200	Siemens	MM0202B1200	1	22	X	X	4
SR-408	Meter Main Combo	200	Siemens	MM0202B1200ESC	1	22	X	X	4
SR-408	Meter Main Combo	200	Siemens	MM0202L1200EFC	1	22	X	X	4
SR-408	Meter Main Combo	200	Siemens	MM0202L1200ESC	1	22	X	X	4
SR-408	Meter Main Combo	200	Siemens	MM0406L1200FEC	1	22	X	X	4
SR-408	Meter Main Combo	200	Siemens	MM0406L1200SEC	1	22	X	X	4
SR-408	Meter Main Combo	200	Square D	SC12L200S	1	10	X	X	4
SR-408	Meter Main Combo	200	Square D	SC816F200F	1	22		X	4
SR-408	Meter Main Combo	200	Square D	SC816F200S	1	22	X	X	4
SR-412	Meter Main Combo	400	Square D	CU12L400CN	1	25		X	4
SR-418	Meter Pak All-In-One	125	Eaton Cutler-Hammer	1MP3124R	1	10-42			4
SR-418	Meter Pak All-In-One	125	Eaton Cutler-Hammer	1MP4124R	1	10-42			4
SR-418	Meter Pak All-In-One	125	Eaton Cutler-Hammer	1MP5126R	1	10-42			4
SR-418	Meter Pak All-In-One	125	Eaton Cutler-Hammer	1MP6126R	1	10-42			4
SR-418	Meter Pak All-In-One	125	Siemens	WEP2211 w/NEMA Stud Kit	1	65	X	X	4
SR-418	Meter Pak All-In-One	125	Siemens	WEP3311 w/NEMA Stud Kit	1	65	X	X	4
SR-418	Meter Pak All-In-One	125	Siemens	WEP4411 w/NEMA Stud Kit	1	65	X	X	4
SR-418	Meter Pak All-In-One	125	Siemens	WEP4511 w/NEMA Stud Kit	1	65	X	X	4
SR-418	Meter Pak All-In-One	125	Siemens	WEP4611 w/NEMA Stud Kit	1	65	X	X	4
SR-418	Meter Pak All-In-One	125	Siemens	WEP5411 w/NEMA Stud Kit	1	65	X	X	4
SR-418	Meter Pak All-In-One	125	Siemens	WEP6511 w/NEMA Stud Kit	1	65	X	X	4

♥ Test - Bypass Equipped

♦ The Cat. Number is out of date & will be removed the following year to allow stock out.

♫ The panel requires a HP40TFKIT kit to be purchased if this panel is to be served from overhead.

♣ New addition to the book.

Tucson Electric Power TEP UniSourceEnergy SERVICES SANTA CRUZ COUNTY

INITIATED BY	REVISION NO.
ESR COMM.	GC
4-07	ESR COMM.
	EFFECTIVE DATE
	16
	4-18
SR-452	4-18
Pg. 12 of 14	

USE: Reference list to purchase or stock approved metering service equipment

APPROVED METERING AND SERVICE EQUIPMENT

TEP SR#	Type of Application	Size	Manufacturer	Catalog Number	Phase	Fault Rating	OH	UG	Terminals
SR-418	Meter Pak All-In-One	125	Siemens	WEP6611 w/NEMA Stud Kit	1	65	X	X	4
SR-418	Meter Pak All-In-One	125	Square D	MP33125 w/Lug Kit MMSK2	1	42	X	X	4
SR-418	Meter Pak All-In-One	125	Square D	MP44125 w/Lug Kit MMSK2	1	42	X	X	4
SR-418	Meter Pak All-In-One	125	Square D	MP55125 w/Lug Kit MMSK2	1	42	X	X	4
SR-418	Meter Pak All-In-One	125	Square D	MP66125 w/Lug Kit MMSK2	1	42	X	X	4
SR-418	Meter Pak All-In-One	125	Square D	MP22125	1	42	X	X	4
SR-418	Meter Pak All-In-One	125	Eaton Cutler-Hammer	1MP2122R	1	10-42	X	X	4
SR-418	Meter Pak All-In-One	200	Eaton Cutler-Hammer	1MP2204R	1	10-42			4
SR-418	Meter Pak All-In-One	200	Eaton Cutler-Hammer	1MP3206R	1	10-42			4
SR-418	Meter Pak All-In-One	200	Eaton Cutler-Hammer	1MP4206R	1	10-42			4
SR-418	Meter Pak All-In-One	200	Eaton Cutler-Hammer	1MP5206R	1	10-42			4
SR-418	Meter Pak All-In-One	200	Eaton Cutler-Hammer	1MP6206R	1	10-42			4
SR-418	Meter Pak All-In-One	200	Siemens	WEP10612 w/NEMA Stud Kit	1	100	X	X	4
SR-418	Meter Pak All-In-One	200	Siemens	WEP4212 w/NEMA Stud Kit	1	100	X	X	4
SR-418	Meter Pak All-In-One	200	Siemens	WEP4312 w/NEMA Stud Kit	1	100	X	X	4
SR-418	Meter Pak All-In-One	200	Siemens	WEP4412 w/NEMA Stud Kit	1	100	X	X	4
SR-418	Meter Pak All-In-One	200	Siemens	WEP6412 w/NEMA Stud Kit	1	100	X	X	4
SR-418	Meter Pak All-In-One	200	Siemens	WEP6512 w/NEMA Stud Kit	1	100	X	X	4
SR-418	Meter Pak All-In-One	200	Siemens	WEP6612 w/NEMA Stud Kit	1	100	X	X	4
SR-418	Meter Pak All-In-One	200	Siemens	WEP8612 w/NEMA Stud Kit	1	100	X	X	4
SR-418	Meter Pak All-In-One	200	Square D	MP42200 w/Lug Kit MMSK2	1	22	X	X	4
SR-418	Meter Pak All-In-One	200	Square D	MP43200 w/Lug Kit MMSK2	1	22	X	X	4
SR-418	Meter Pak All-In-One	200	Square D	MP64200 w/Lug Kit MMSK2	1	22	X	X	4
SR-418	Meter Pak All-In-One	200	Square D	MP85200 w/Lug Kit MMSK2	1	22	X	X	4
SR-418	Meter Pak All-In-One	200	Square D	MP86200 w/Lug Kit MMSK2	1	22	X	X	4
SR-418	Meter Pak Modular	200	Eaton Cutler-Hammer	EZM113225	1	100			4
SR-418	Meter Pak Modular	125	Eaton Cutler-Hammer	1MM312R	1	42			4
SR-418	Meter Pak Modular	125	Eaton Cutler-Hammer	1MM312RC	1	42			4
SR-418	Meter Pak Modular	125	Eaton Cutler-Hammer	1MM412R	1	42			4
SR-418	Meter Pak Modular	125	Eaton Cutler-Hammer	1MM412RC	1	42			4
SR-418	Meter Pak Modular	125	Eaton Cutler-Hammer	3MM212R	3	42			7
SR-418	Meter Pak Modular	125	Eaton Cutler-Hammer	3MM212RC	3	42			7
SR-418	Meter Pak Modular	125	Eaton Cutler-Hammer	3MM312R	3	42			7
SR-418	Meter Pak Modular	125	Eaton Cutler-Hammer	3MM312RC	3	42			7
SR-418	Meter Pak Modular	125	Eaton Cutler-Hammer	3MM412R	3	42			7

♥ Test - Bypass Equipped

♦ The Cat. Number is out of date & will be removed the following year to allow stock out.

♫ The panel requires a HP40TFKIT kit to be purchased if this panel is to be served from overhead.

♣ New addition to the book.

Tucson Electric Power TEP UniSourceEnergy SERVICES SANTA CRUZ COUNTY

INITIATED BY	REVISION NO.
ESR COMM.	GC
4-07	ESR COMM.
EFFECTIVE DATE	17
4-18	SR-452
Pg. 13 of 14	

USE: Reference list to purchase or stock approved metering service equipment

APPROVED METERING AND SERVICE EQUIPMENT

TEP SR#	Type of Application	Size	Manufacturer	Catalog Number	Phase	Fault Rating	OH	UG	Terminals
SR-418	Meter Pak Modular	125	Eaton Cutler-Hammer	3MM412RC	3	42			7
SR-418	Meter Pak Modular	125	GE	TMM2212R	1				4
SR-418	Meter Pak Modular	125	GE	TMM4312R	1				4
SR-418	Meter Pak Modular	125	GE	TMM4412R	1				4
SR-418	Meter Pak Modular	125	Siemens	WMM21125	1	65	X	X	4
SR-418	Meter Pak Modular	125	Siemens	WMM22125J	1	65	X	X	4
SR-418	Meter Pak Modular	125	Siemens	WMM31125	1	65	X	X	4
SR-418	Meter Pak Modular	125	Siemens	WMM32125J	1	65	X	X	4
SR-418	Meter Pak Modular	125	Siemens	WMM41125	1	65	X	X	4
SR-418	Meter Pak Modular	125	Siemens	WMM42125J	1	65	X	X	5
SR-418	Meter Pak Modular	125	Square D	EZM113125	1	42			4
SR-418	Meter Pak Modular	125	Square D	EZM114125	1	42			4
SR-418	Meter Pak Modular	125	Square D	EZM313125	1	42			5
SR-418	Meter Pak Modular	125	Square D	EZM314125	1	42			5
SR-418	Meter Pak Modular	200	Eaton Cutler-Hammer	1MM320R	1	100			4
SR-418	Meter Pak Modular	200	Eaton Cutler-Hammer	1MM320RC	1	100			4
SR-418	Meter Pak Modular	200	Eaton Cutler-Hammer	1MM420R	1	100			4
SR-418	Meter Pak Modular	200	Eaton Cutler-Hammer	1MM420RC	1	100			4
SR-418	Meter Pak Modular	200	Eaton Cutler-Hammer	3MM220R	3	100			7
SR-418	Meter Pak Modular	200	Eaton Cutler-Hammer	3MM220RC	3	100			7
SR-418	Meter Pak Modular	200	Eaton Cutler-Hammer	3MM320R	3	100			7
SR-418	Meter Pak Modular	200	Eaton Cutler-Hammer	3MM320RC	3	100			7
SR-418	Meter Pak Modular	200	Eaton Cutler-Hammer	3MM420R	3	100			7
SR-418	Meter Pak Modular	200	Eaton Cutler-Hammer	3MM420RC	3	100			7
SR-418	Meter Pak Modular	200	GE	TMM4220R	1				4
SR-418	Meter Pak Modular	200	GE	TMM6320R	1				4
SR-418	Meter Pak Modular	200	GE	TMM6420R	1				4
SR-418	Meter Pak Modular	200	Siemens	WMM21225	1	100	X	X	4
SR-418	Meter Pak Modular	200	Siemens	WMM22225J	1	100	X	X	4
SR-418	Meter Pak Modular	200	Siemens	WMM31225	1	100	X	X	4
SR-418	Meter Pak Modular	200	Siemens	WMM32225J	1	100	X	X	5
SR-418	Meter Pak Modular	200	Siemens	WMM41225	1	100	X	X	4
SR-418	Meter Pak Modular	200	Siemens	WMM42225J	1	100	X	X	5
SR-418	Meter Pak Modular	200	Square D	EZM112225	1	100			4
SR-418	Meter Pak Modular	200	Square D	EZM114225	1	100			4

♥ Test - Bypass Equipped

♦ The Cat. Number is out of date & will be removed the following year to allow stock out.

♫ The panel requires a HP40TFKIT kit to be purchased if this panel is to be served from overhead.

♣ New addition to the book.

Tucson Electric Power TEP UniSourceEnergy SERVICES SANTA CRUZ COUNTY

INITIATED BY	REVISION NO.
ESR COMM.	GC
10-09	8
ESR COMM. EFFECTIVE DATE	4-18
4-18	

SR-452
Pg. 14 of 14

USE: Reference list to purchase or stock approved metering service equipment

APPROVED METERING AND SERVICE EQUIPMENT

TEP SR#	Type of Application	Size	Manufacturer	Catalog Number	Phase	Fault Rating	OH	UG	Terminals
SR-418	Meter Pak Modular	200	Square D	EZM312225	3	100			5
SR-418	Meter Pak Modular	200	Square D	EZM313225	3	100			5
SR-418	Meter Pak Modular	200	Square D	EZM314225	3	100			5
SR-418	Meter Pak Modular	225	Siemens	WMT11225 ♥	1	100	X	X	4
SR-418	Meter Pak Modular	225	Siemens	WMT12225J ♥	1	100	X	X	5
SR-418	Meter Pak Modular	225	Siemens	WMT13225J ♥	3	100	X	X	7
SR-418	Meter Pak Modular	225	Siemens	WMT21225 ♥	1	100	X	X	4
SR-418	Meter Pak Modular	225	Siemens	WMT22AB225J ♥	1	100	X	X	5
SR-418	Meter Pak Modular	225	Siemens	WMT22BC225J ♥	1	100	X	X	5
SR-418	Meter Pak Modular	225	Siemens	WMT22CA225J ♥	1	100	X	X	5
SR-418	Meter Pak Modular	225	Siemens	WMT23225J ♥	3	100	X	X	7
SR-418	Meter Pak Modular	225	Siemens	WMT31225 ♥	1	100	X	X	4
SR-418	Meter Pak Modular	225	Siemens	WMT32225J ♥	1	100	X	X	5
SR-418	Meter Pak Modular	225	Siemens	WMT33225J ♥	3	100	X	X	7
SR-410	Meter Socket Only	100	Milbank	114TB	1	200	X	X	4
SR-410	Meter Socket Only	100	Milbank	117TB	3	200	X	X	7
SR-410	Meter Socket Only	100	Milbank	U5929	1	10	X	X	4
SR-408	Meter Socket Only	200	Cooper B-Line	UG204	1	200		X	4
SR-408	Meter Socket Only	200	Cooper B-Line	UG204MSCD	1	200		X	4
SR-410	Meter Socket Only	200	Milbank	124TB	1	200	X	X	4
SR-410	Meter Socket Only	200	Milbank	127TB	3	200	X	X	7
SR-410	Meter Socket Only	200	Milbank	U3328-RXL	3	200	X	X	7
SR-408	Meter Socket Only	200	Milbank	U4518-XL-W	1	200	X	X	4
SR-412	Meter Socket Only	320	Cooper B-Line	324C	1	100		X	4
SR-412	Meter Socket Only	320	Milbank	U3548-X	1	10		X	4
SR-408	Pedestal	100	Cooper B-Line	M1M100PD	1	10		X	4
SR-408	Pedestal	100	Milbank	U5240-0-100S	1	10		X	4
SR-408	Pedestal	100	Milbank	U5241-0-100S	1	10		X	4
SR-408	Pedestal	125	Cooper B-Line	M1M125PD	1	10		X	4
SR-408	Pedestal	200	Cooper B-Line	M2M200PD	1	10		X	4
SR-408	Pedestal	200	Cooper B-Line	M2M200PPD	1	22		X	4
SR-408	Pedestal	200	Milbank	MPAP-200-MB-78 ♥	1	10		X	4
SR-408	Pedestal	200	Milbank	U5240-0-200S	1	10		X	4
SR-408	Pedestal	200	Milbank	U5241-0-200S	1			X	4
SR-412	Top Feed Kit for HP Units	400	Eaton Cutler-Hammer	HP40TFKIT	1		X		

♥ Test - Bypass Equipped

♦ The Cat. Number is out of date & will be removed the following year to allow stock out.

♫ The panel requires a HP40TFKIT kit to be purchased if this panel is to be served from overhead.

♣ New addition to the book.

500
SHORT CIRCUIT PROTECTION SECTION

SR STANDARDS

510 Short Circuit Protection

SHORT CIRCUIT PROTECTION

The National Electrical Code, state, county and municipal codes and/or regulations require that service entrance equipment shall be suitable for the short-circuit current available at its supply terminals. It is the responsibility of the customer to install service entrance equipment and protection devices (fuses and/or circuit breakers) capable of interrupting and withstanding the available fault current.

Single-Phase Customer

For the purpose of equipment specification and permitting Service Provider will design its underground facilities so that the maximum fault current at the line terminals of the metering equipment will be limited to not exceed the following:

- Residential Services 200A or less - maximum AFC 10,000A UG. Except if the cable length is less than 45 feet when being served from a transformer. Then the AFC will be 22,000A.
- Residential Services 201A-400A - maximum AFC 22,000A UG only
- Residential Services 401A-800A - maximum AFC 42,000A UG only
- Commercial Services 400A or less - maximum AFC 22,000A (UG secondary minimum 45 feet in length)
- Commercial Services 800A or less - maximum AFC 42,000A (any length UnderGround secondary)
- Residential Services 200A or less - maximum AFC 10,000A OH*. Except when served from a 3 phase transformer bank. Contact Service Provider for fault current.
- Residential Services 201A-600A OH* - contact Service Provider for fault current.
- Commercial Services 600A or less OH* - contact Service Provider for fault current.

*OH is defined as any service that originates from Service Provider's overhead distribution system.

Due to the size and location of transformers and service conductors, the actual fault current may be lower than the values stated above. Upon request, Service Provider will calculate the actual available fault current.

Three-Phase Customer

For three-phase customers, Service Provider will determine the available fault current for each installation. The available fault current will be marked on switchgear plans and redline service layout drawing for specific projects. For three phase service from a pad mounted transformer, the fault current posted will be the available fault current at the secondary terminals of the transformer and will not take into account any reduction in fault current due to customer owned conductors. For three phase service from overhead transformers, the fault current posted will be at the point of delivery and will take into account the fault current reduction due to Service Provider owned secondary conductors but will not take into account any fault current reduction due to customer owned conductors.

SHORT CIRCUIT PROTECTION

Table 1 gives the available fault current for the size of customer's service entrance equipment installed. This chart has been published so that the customer can pre-order switchgear. However, care must be exercised in using this table, as it applies only when Service Provider is serving the customer's service entrance from an individual transformer which will be sized and installed for that load alone. Consult Service Provider for that decision.

TABLE 1 - AVAILABLE FAULT CURRENT BASED ON SIZE OF SERVICE ENTRANCE

SERVICE ENTRANCE EQUIPMENT CAPACITY (AMPS)	ASSUMED LOADING (AMPS) (80%)	MAXIMUM 3Ø FAULT CURRENT IN SYMMETRICAL AMPERES FOR SERVICE VOLTAGE LISTED				
		120/208V		120/240V	277/480V	
		POLE TYPE TRANSFORMER	PAD-MOUNT TRANSFORMER	POLE TYPE TRANSFORMER	POLE TYPE TRANSFORMER	PAD-MOUNT TRANSFORMER
200	160	13,900	13,900	12,100	12,100	12,100
400	320	20,900	27,800	18,100	24,100	24,100
600	480	27,800	55,600	31,900	35,500	32,600
800	640	36,800	55,600	42,500	35,500	32,600
1000	800	49,100	55,600	42,500		32,600
1200	960	77,400	75,100	67,00		32,600
1600	1280	77,400	75,100			32,600
2000	1600		75,100			32,600
2500	2000		75,100			52,300
3000	2400		75,100			52,300
4000	3200					52,300

600 SECTION
GROUNDING AND BONDING

TITLE	SR-No.
General Information, Introduction, NFPA 70 NEC, Grounding, Bonding (Unfused Areas)	600
Minimum Size of Bonding/Equipment Grounding/Grounding Electrode Conductors and Grounding Bus	601
Concrete Encased Electrode (Ufer Ground)	602
Single Phase Meter Pedestal	603
Single Phase Overhead Residential Service (Meter Socket and Load Center)	604
Single Phase Overhead or Underground Service (All in One)	605
Single Phase Overhead or Underground (Multi-Pak Service)	606
Single or Three Phase Overhead Service(Meter Socket and Disconnects)	607
Three-Phase Service Overhead or Underground (Pull Section, Raceway and Sockets)	608
Transformer Rated Service With CT CAN Overhead or Underground	609
Transformer Rated Service Switchgear Overhead or Underground	610

USE: General Customer information for grounding and bonding

GENERAL INFORMATION

INTRODUCTION

TEP/UES recognizes the value of the NEC Grounding and Bonding requirements. We are pleased to share the following illustrations and data applicable to the requirements.

This information will provide assistance and guidance to person's installing Service Entrance equipment in areas served by TEP/UES.

The methods of Grounding and Bonding of Service Entrance equipment shown in this manual are recommended to maintain consistency throughout our service territory.

The following drawings and tables will assist in assuring a safe and adequate grounding installation, acceptable under any code. Please consult your local governmental agency that has provided you with a permit for all applicable codes within their jurisdiction.

NFPA 70 NEC

1. Customer wire shall not be run through utility sealed areas.
2. Weatherproof hubs, etc., shall be used on any penetrations of equipment at the same height or above energized areas. A good rule of thumb is; that unless the penetration is on the bottom surface of a can, it shall be done with a weatherproof connection. Indoor equipment is an exception to this requirement.
3. Bonding hubs (Meyers or equivalent) shall not be used on multi-centric knockouts, unless the largest knockout is used.
4. Interior metal water piping systems, complying with NEC requirements are permitted for grounding and shall be bonded to the service entrance enclosure with conductors sized per NEC. In multiple occupancy buildings where the interior metal water piping system for the individual occupancies is isolated from all other occupancies by the use of non-metallic pipe, each water system may be bonded to the panel board or switchboard enclosure supplying that occupancy, sized per NEC.
5. Other metal piping systems (e.g. gas pipe) shall be bonded to the service equipment enclosure with a conductor sized per NEC.
6. Nonconductive paint must be removed at threads, contact points and contact surfaces of any ground/bond lugs, terminal strips, etc., to assure a good electrical connection.

GROUNDING

The grounding electrode conductor may be either bare or with green insulation. Ground electrode conductors not encased in conduit shall be a minimum size of No. 4 copper or larger and must be securely fastened to the building or structure with approved fastening devices. The spacing of such devices shall not exceed 2 feet. If a ground rod is used as an electrode, they shall be at least 6 feet apart and at least 8 feet shall be in contact with the soil.

Grounding Electrode conductors smaller than size No. 4 copper shall be solid copper wire, or shall be attached to the ground rod using the exothermic welding process.

BONDING (UNFUSED AREA)

Bonding is required on all enclosures, equipment, raceways, and fittings which contain unfused service conductors. Nipples and bushings installed through eccentric or concentric knockouts must be bonded with ground bushings, wedges, or other approved devices. Bond conductor size shall be per NEC.

USE: General Customer information for grounding and bonding.

MINUMUM SIZE OF BONDING, EQUIPMENT GROUNDING, GROUNDING ELECTRODE CONDUCTORS AND GROUND BUS

TABLE 250.122 Minimum Size Equipment Grounding Conductors for Grounding Raceway and Equipment		
Rating or Setting of Automatic Overcurrent Device in Circuit Ahead of Equipment, Conduit, etc., Not Exceeding (Amperes)	Copper	Aluminum or Copper-Clad Aluminum
15	14	12
20	12	10
30	10	8
40	10	8
60	10	8
100	8	6
200	6	4
300	4	2
400	3	1
500	2	1/0
600	1	2/0
800	1/0	3/0
1000	2/0	4/0
1200	3/0	250
1600	4/0	350
2000	250	400
2500	350	600
3000	400	600
4000	500	800
5000	700	1200
6000	800	1200
		Size (AWG or kcmil)

NOTES:

1. For sizing bonding conductor for gas line, per NEC 250.014.
2. For sizing any bond conductor required on the load side of fuses or circuit breakers per NEC 250.102.

1

FORMALLY: SR-453 Pg. 3

USE: General Customer information for grounding and bonding.

MINUMUM SIZE OF BONDING, EQUIPMENT GROUNDING, GROUNDING ELECTRODE CONDUCTORS AND GROUND BUS

TABLE 250.66 Grounding Electrode Conductor for Alternating Current System			
Size of Largest Underground Service - Entrance Conductor or Equivalent Area for Parallel Conductors (AWG/kcmil)		**Size of Grounding Electrode Conductor (AWG/kcmil)**	
Copper	Aluminum or Copper-Clad Aluminum	Copper	Aluminum or Copper-Clad Aluminum
2 or smaller	1/0 or smaller	8	6
1 or 1/0	2/0 or 3/0	6	4
2/0 or 3/0	4/0 or 250	4	2
Over 3/0 through 350	Over 250 through 500	2	1/0
Over 350 through 600	Over 500 through 900	1/0	3/0
Over 600 through 1100	Over 900 through 1750	2/0	4/0
Over 1100	Over 1750	3/0	250
Review the notes below this table and in the NEC			

NOTES:

1. For metal water pipe bonding refer to the NEC 250.104
2. For sizing main bonding jumper from equipment grounding bus to neutral bus refer to the NEC 250.28.
3. Where exposed, a grounding electrode conductor or its enclosure shall be securely fastened to the surface on which it is carried. A #4 AWG or larger copper or aluminum grounding electrode conductor shall be protected where exposed to physical damage. A #6 AWG grounding electrode conductor that is free from exposure to physical damage shall be permitted to be run along the surface of the building construction without metal covering or protection where it is securely fastened to the construction; otherwise, it shall be in rigid metal conduit, intermediate metal conduit, rigid nonmetallic conduit, electrical metallic tubing, or cable armor. Grounding electrode conductors smaller than #6 AWG shall be in rigid metal conduit, intermediate metal conduit, rigid nonmetallic conduit, electrical metallic tubing, or cable armor. Refer to the NEC 250.64

1

FORMALLY: SR-453 Pg. 4

USE: GENERAL CUSTOMER INFORMATION FOR GROUNDING AND BONDING

CONCRETE ENCASED ELECTRODE (UFER GROUND)

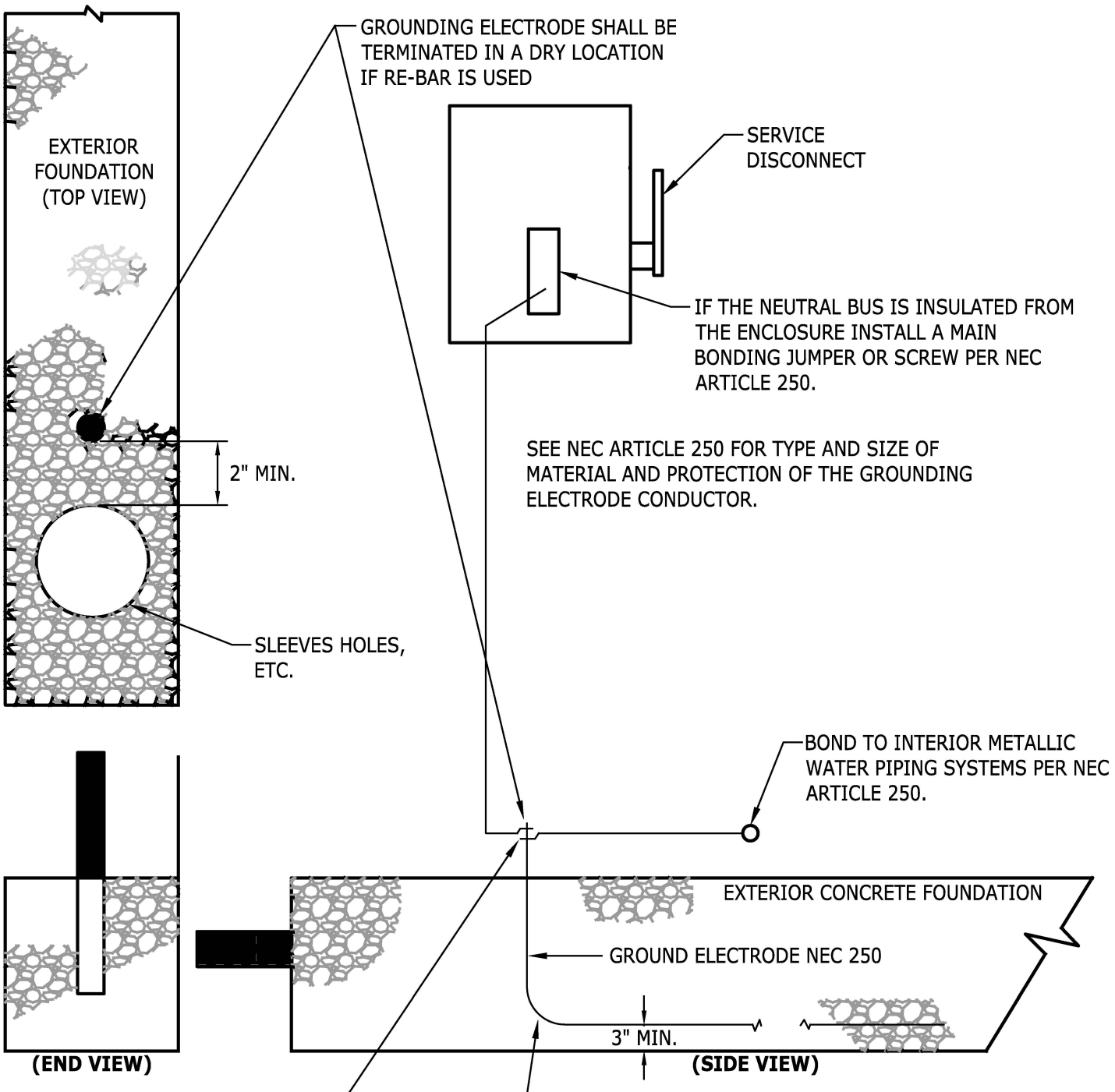

FORMALLY: SR-453 Page 5

TEP Tucson Electric Power / UniSourceEnergy SERVICES SANTA CRUZ COUNTY	INITIATED BY	DM	REVISION NO.	0	SR-602 Pg. 1 of 1
			ESR COMM.	-	
	ESR COMM.	7-17	EFFECTIVE DATE	7-17	

USE: GENERAL CUSTOMER INFORMATION FOR GROUNDING AND BONDING

SINGLE PHASE METER PEDESTAL

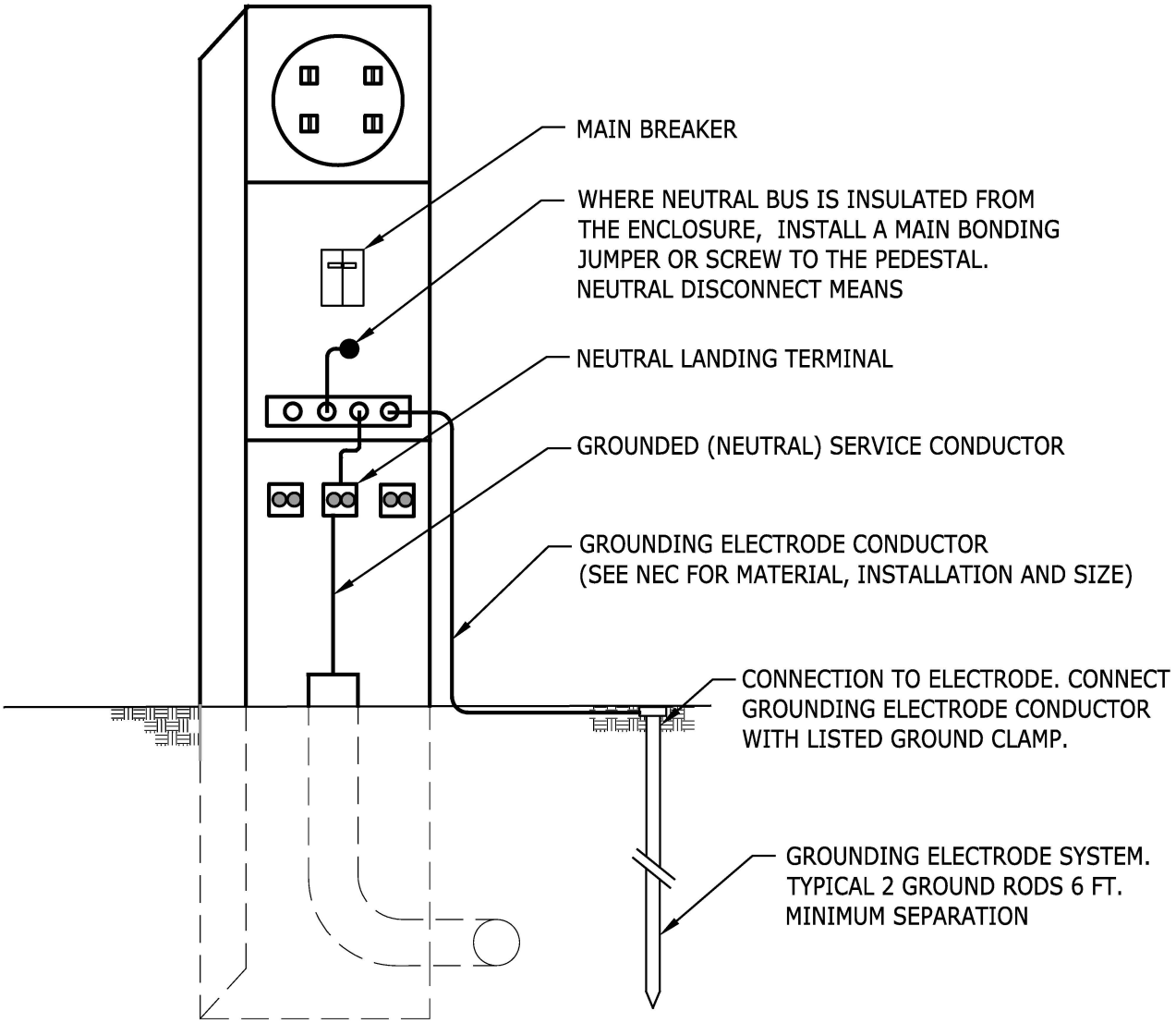

SEE NEC ARTICLE 250 FOR REFERENCE.

FORMALLY: SR-453 Page 6

TEP Tucson Electric Power / UniSourceEnergy SERVICES SANTA CRUZ COUNTY	INITIATED BY	DM	REVISION NO.	0	SR-603 Pg. 1 of 1
			ESR COMM.	-	
	ESR COMM.	7-17	EFFECTIVE DATE	7-17	

USE: GENERAL CUSTOMER INFORMATION FOR GROUNDING AND BONDING

SINGLE PHASE OVERHEAD RESIDENTIAL SERVICE (METER SOCKET & LOAD CENTER)

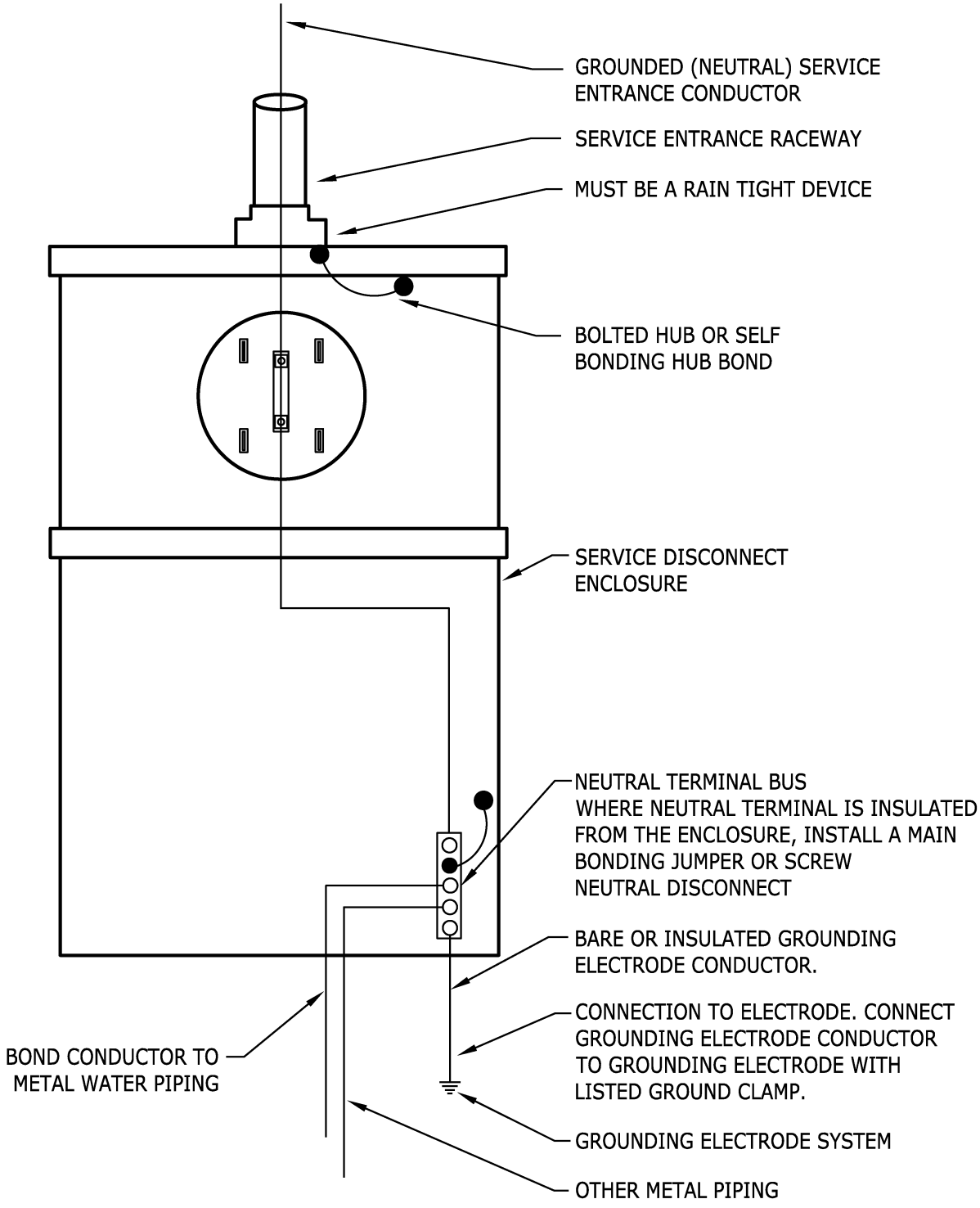

SEE NEC ARTICLE 250 FOR REFERENCE.

FORMALLY: SR-453 Page 8

TEP Tucson Electric Power / UniSourceEnergy SERVICES SANTA CRUZ COUNTY	INITIATED BY	DM	REVISION NO.	0	SR-604 Pg. 1 of 1
			ESR COMM.	-	
	ESR COMM.	7-17	EFFECTIVE DATE	7-17	

USE: GENERAL CUSTOMER INFORMATION FOR GROUNDING AND BONDING

SINGLE PHASE OVERHEAD OR UNDERGROUND SERVICE (ALL IN ONE)

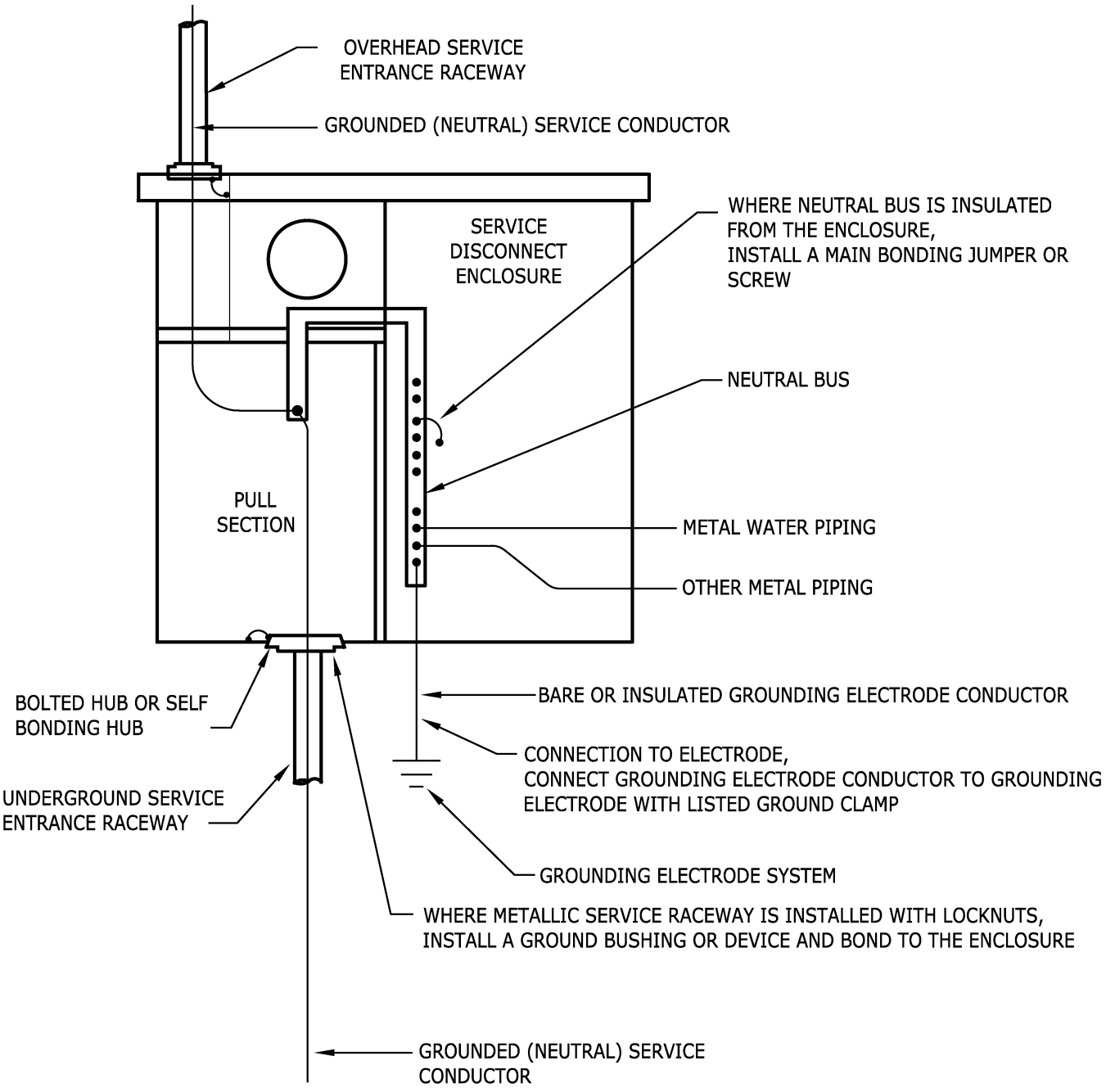

SEE NEC ARTICLE 250 FOR REFERENCE.

FORMALLY: SR-453 Page 9

TEP Tucson Electric Power / UniSourceEnergy SERVICES SANTA CRUZ COUNTY	INITIATED BY	DM	REVISION NO.	0	SR-605 Pg. 1 of 1
			ESR COMM.	-	
	ESR COMM.	7-17	EFFECTIVE DATE	7-17	

USE: GENERAL CUSTOMER INFORMATION FOR GROUNDING AND BONDING

SINGLE PHASE OVERHEAD OR UNDERGROUND (MULTI-PAK SERVICE)

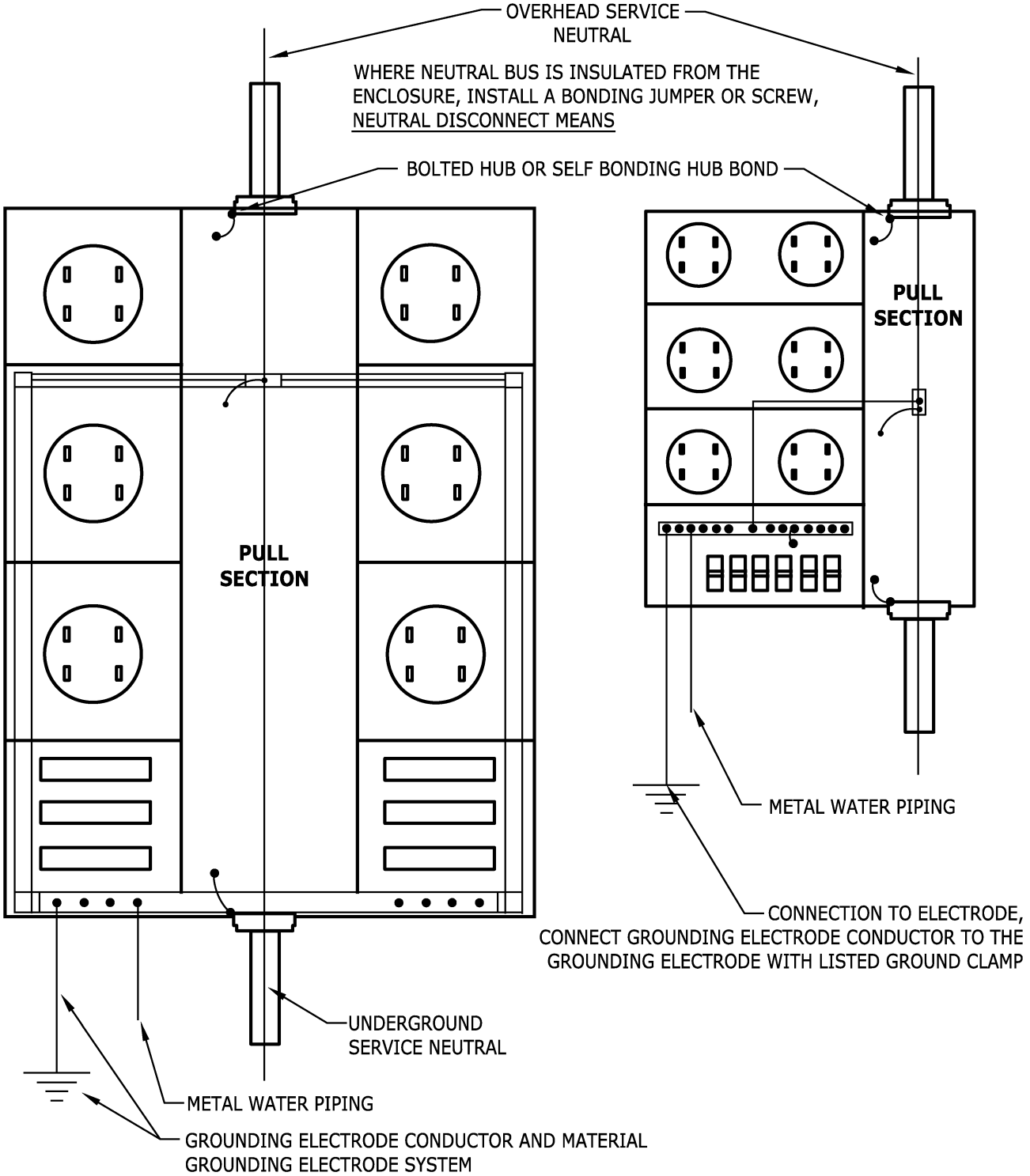

SEE NEC ARTICLE 250 FOR REFERENCE.

FORMALLY: SR-453 Page 10

TEP Tucson Electric Power / UniSourceEnergy SERVICES SANTA CRUZ COUNTY	INITIATED BY	DM	REVISION NO.	0	SR-606 Pg. 1 of 1
			ESR COMM.	-	
	ESR COMM.	7-17	EFFECTIVE DATE	7-17	

USE: GENERAL CUSTOMER INFORMATION FOR GROUNDING AND BONDING

SINGLE OR THREE PHASE OVERHEAD RESIDENTIAL SERVICE (METER SOCKET AND DISCONNECTS)

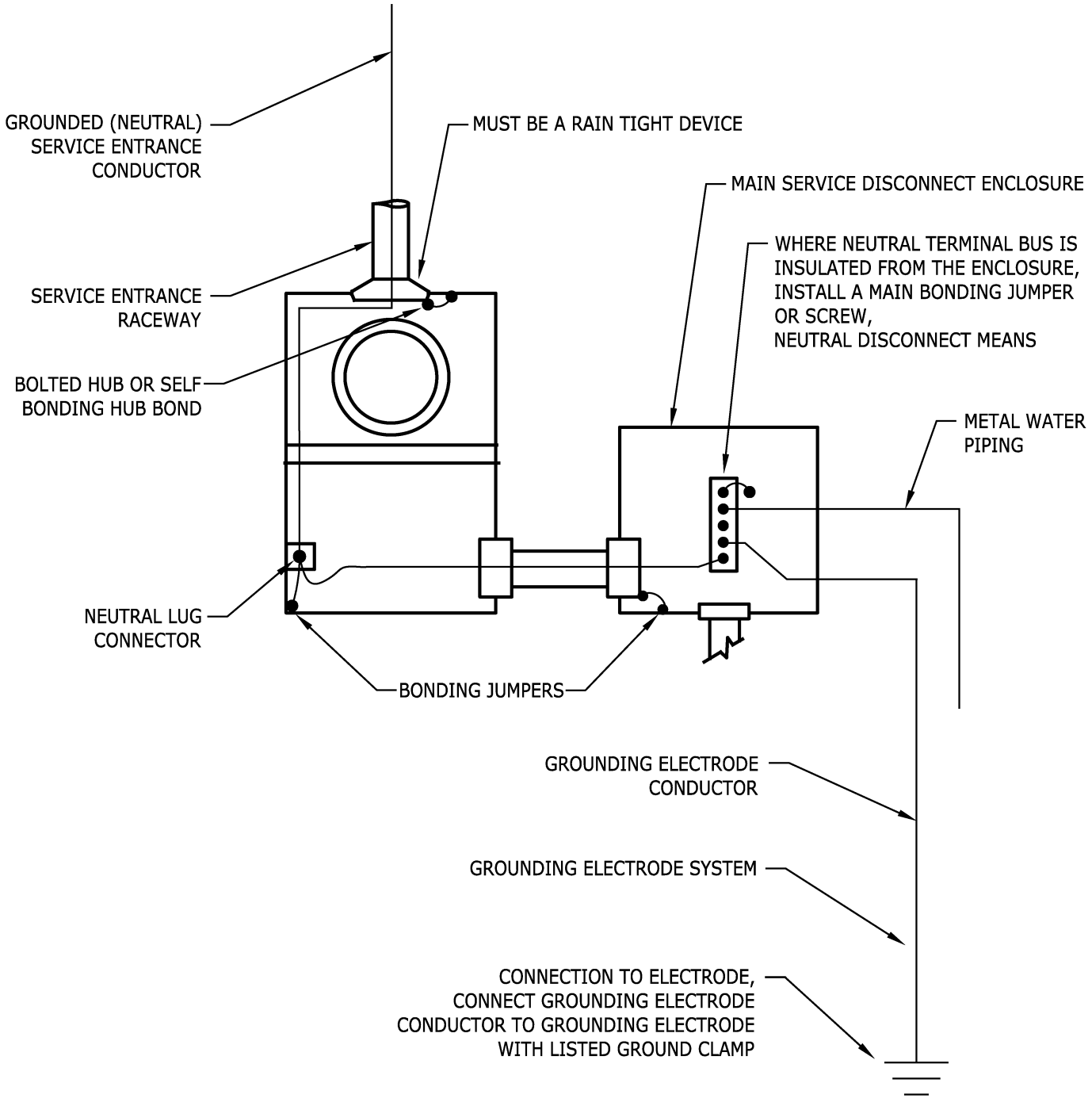

SEE NEC ARTICLE 250 FOR REFERENCE.

FORMALLY: SR-453 Page 7

TEP Tucson Electric Power / UniSourceEnergy SERVICES SANTA CRUZ COUNTY	INITIATED BY	DM	REVISION NO.	0	SR-607 Pg. 1 of 1
			ESR COMM.	-	
	ESR COMM.	7-17	EFFECTIVE DATE	7-17	

USE: GENERAL CUSTOMER INFORMATION FOR GROUNDING AND BONDING

THREE PHASE OVERHEAD OR UNDERGROUND SERVICE (PULL SECTION, RACEWAY & SOCKETS)

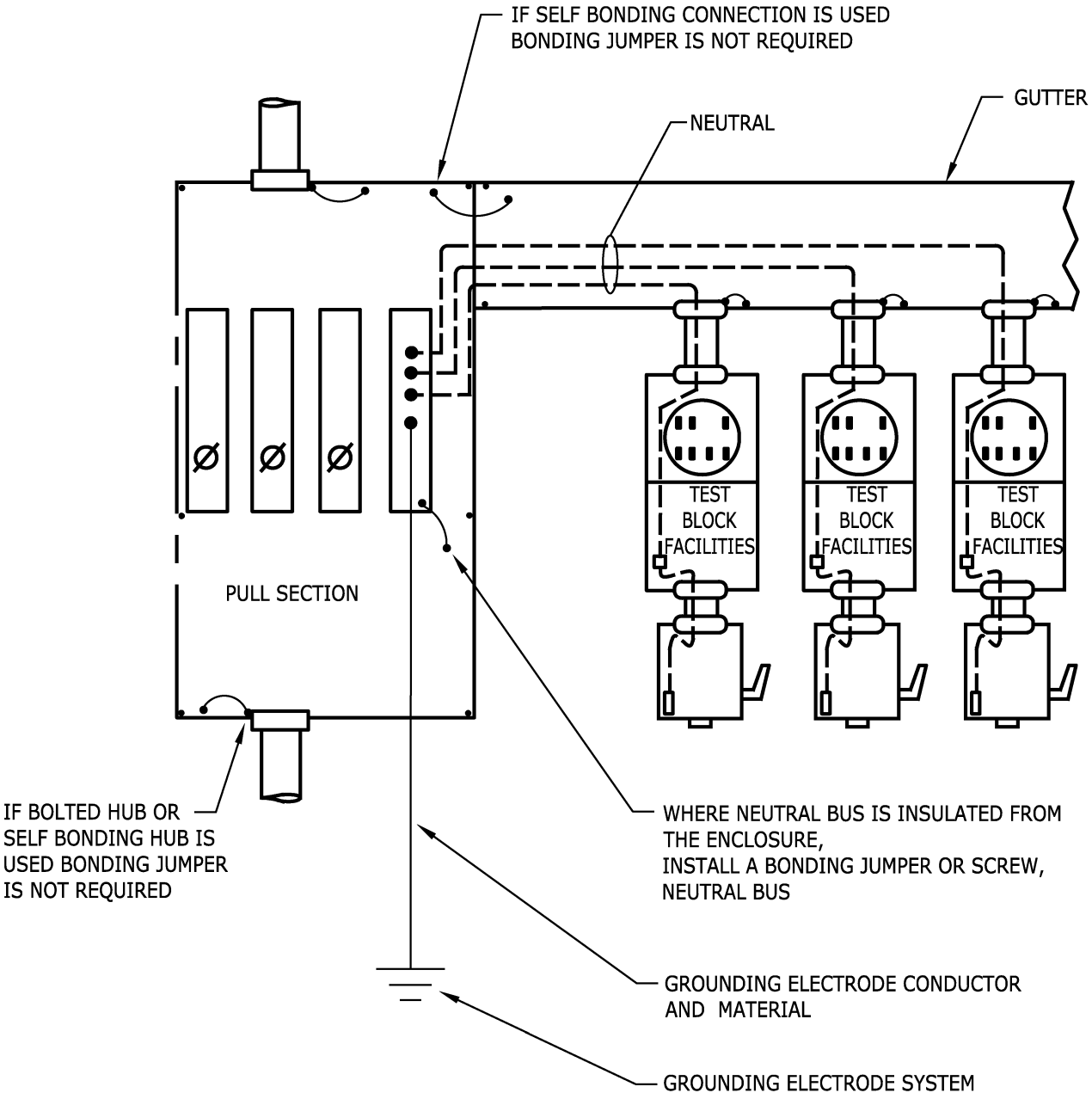

SEE NEC ARTICLE 250 FOR REFERENCE.

FORMALLY: SR-453 Page 11

TEP Tucson Electric Power / UniSourceEnergy SERVICES SANTA CRUZ COUNTY	INITIATED BY	DM	REVISION NO.	0	SR-608 Pg. 1 of 1
			ESR COMM.	-	
	ESR COMM.	7-17	EFFECTIVE DATE	7-17	

USE: GENERAL CUSTOMER INFORMATION FOR GROUNDING AND BONDING

TRANSFORMER RATED OVERHEAD OR UNDERGROUND SERVICE WITH CT CAN

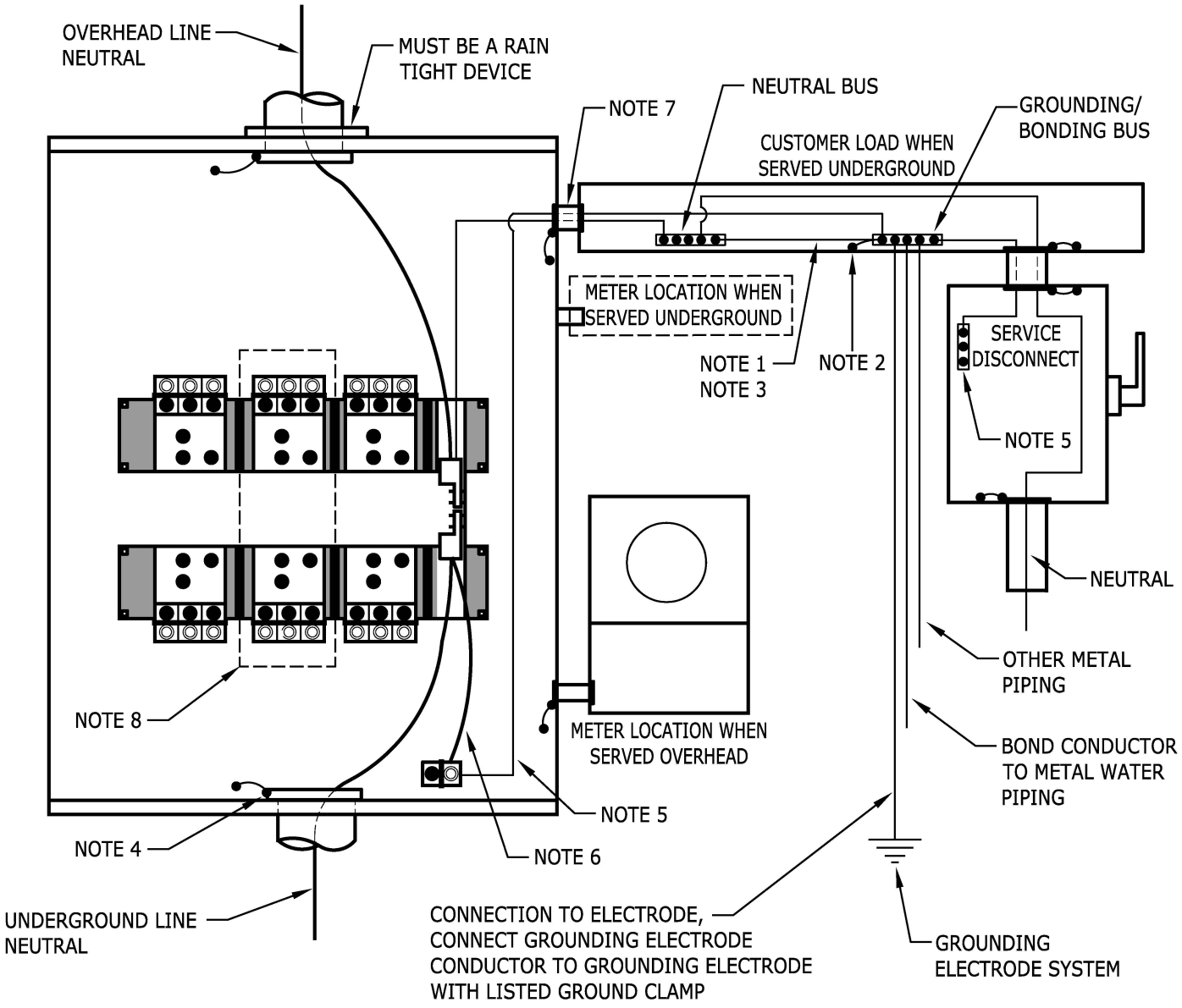

NOTES:

1. MAIN BONDING JUMPER REQUIRED PER NEC.
2. GROUNDING BOND BUS TO BE TIED TO METAL GUTTER.
3. BOND CONDUCTOR SIZED PER THE NEC.
4. IF BOLTED HUB OR SELF BONDING HUB IS USED BONDING JUMPER IS NOT REQUIRED.
5. BOND TERMINAL BAR TO BE TIED TO THE METAL ENCLOSURE.
6. NEUTRAL TERMINAL SHALL BE BONDED TO THE CT CAN.
7. IF PARALLEL CONDUCTORS RUN FROM THE CAN INTO THE GUTTER, A BOND WIRE MUST BE INSTALLED IN EACH CONDUIT PER THE NEC.
8. MIDDLE BUS IS NOT PRESENT ON A SINGLE PHASE INSTALLATION.

SEE NEC ARTICLE 250 FOR REFERENCE.

FORMALLY: SR-453 Page 12

TEP Tucson Electric Power / UniSourceEnergy SERVICES SANTA CRUZ COUNTY	INITIATED BY	DM	REVISION NO.	0	SR-609 Pg. 1 of 1
			ESR COMM.	-	
	ESR COMM.	7-17	EFFECTIVE DATE	7-17	

USE: GENERAL CUSTOMER INFORMATION FOR GROUNDING AND BONDING

TRANSFORMER RATED OVERHEAD OR UNDERGROUND SERVICE SWITCHGEAR

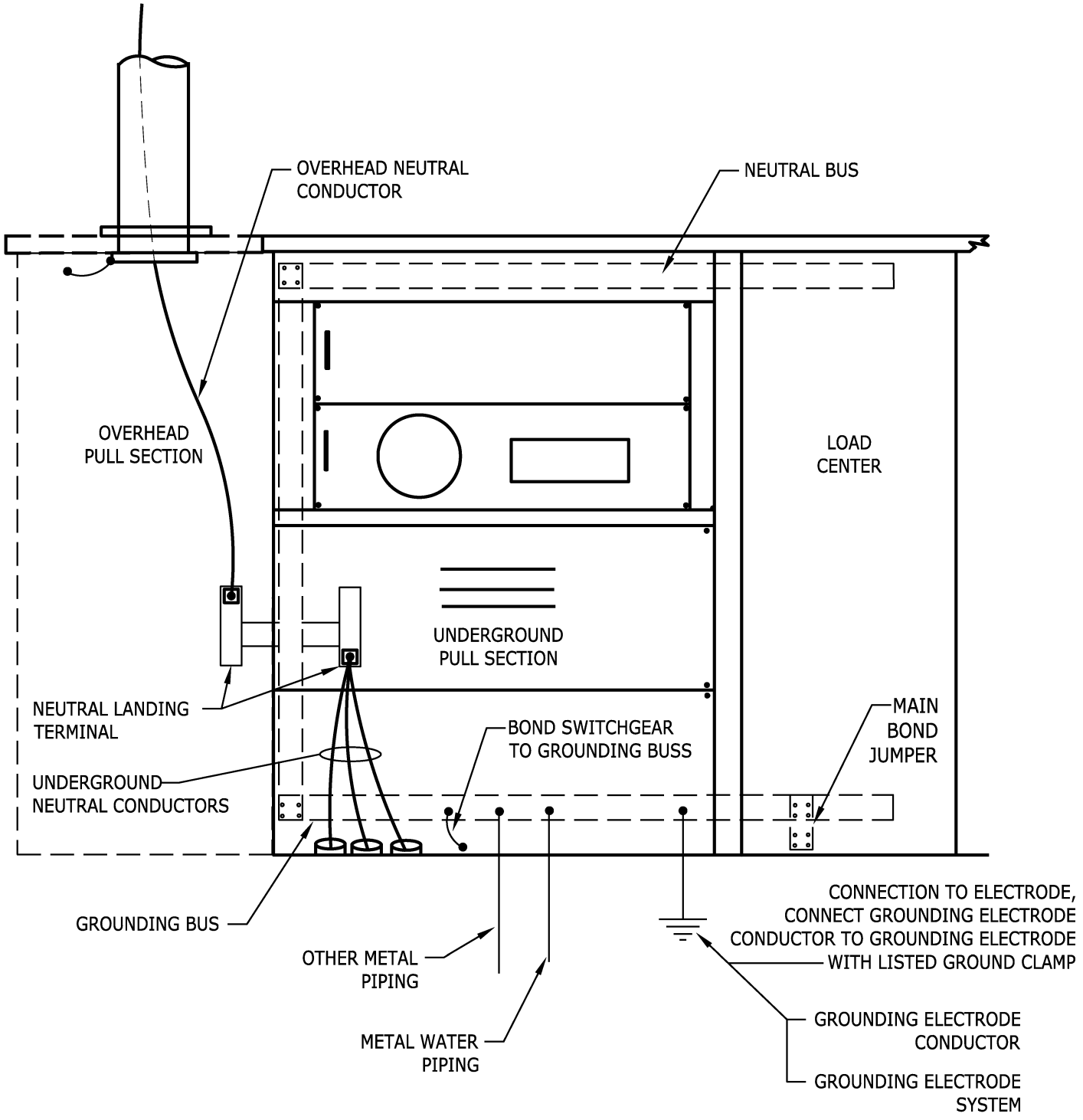

SEE NEC ARTICLE 250 FOR REFERENCE.

FORMALLY: SR-453 Page 13

TEP Tucson Electric Power / UniSourceEnergy SERVICES SANTA CRUZ COUNTY	INITIATED BY	DM	REVISION NO.	0	SR-610 Pg. 1 of 1
			ESR COMM.	-	
	ESR COMM.	7-17	EFFECTIVE DATE	7-17	

700 SECTION
CUSTOMER TECHNOLOGIES

TITLE	SR-No.
Cutomer Installations:	
Installation and Operation of Interconnected Distributed Generation Sources (Including Emergency and Standby Systems)	701
Electric Service Requirements For Small Interconnected Distributed Generation Sources	702
Electric Service Requirements For Medium-Sized Commercial Interconnected Distributed Generation Sources	703
Customer Owned DG-Load Side Tap Interconnection Wiring	704
Customer Owned DG-Load Side Tap (Meter Socket Adapter) Interconnection Wiring	705

CUSTOMER INSTALLATION

CUSTOMER INSTALLATION AND OPERATION OF INTERCONNECTED DISTRIBUTED GENERATION SOURCES
(INCLUDING EMERGENCY AND STANDBY SYSTEMS)

The customer shall not use any other electric power source, including distributed, emergency, and standby generation sources, in parallel with TEP/UES's service and power system, except as provided herein.

1. The construction and installation of interconnected distributed generation (DG), including standby and emergency generation facilities (hereinafter referred to as "Facilities") must comply with the National Electrical Code (NEC) and TEP/UES's Interconnection Requirements for Distributed Generation.

2. Synchronous, parallel operation of these Facilities with TEP/UES's power system may be permitted under the following conditions:

   a. All customer Facilities, including switching devices and other special equipment, must adhere to all applicable UL and IEEE standards and recommended practices, and be approved by TEP/UES. It is recommended that the customer consult with the Company prior to commencement of design, construction, and installation of the Facilities.

   b. The Facilities must conform to IEEE 519 on harmonic levels, flicker, and waveform distortion, and shall not produce excessive voltage or frequency variations of TEP/UES's power system. Customer is also required to maintain generator power factor and phase current imbalance (3-phase system) within TEP/UES prescribed limits. (Refer to TEP/UES's Interconnection Requirements for Distributed Generation)

   c. TEP/UES must have access to the customer's DG disconnect switch clearly labeled in 1" high letters stating "Utility DG Disconnect". The switch shall be a gang-operated, load-break device capable of isolating all ungrounded conductors of the Facility from the utility system. The switch shall be accessible to TEP/UES operating personnel, and shall be lockable, and clearly indicate open or closed switch position with a visible air-gap employed in the open position. The switch shall be visually inspected to determine that the switch is open.

   d. As required by NEC Article 705.10, a permanent sign shall be installed at the service entrance indicating the type(s) and location(s) of all electric power production sources capable of parallel operation with the TEP/UES system. Also in accordance with NEC Article 705.10, labeling shall be provided at all locations of all such electric power production sources. Installations with large numbers of power production sources shall be permitted to be designated by groups.

   e. In accordance with standard utility safe operating practices, TEP/UES shall have the right to temporarily disconnect or disable the Facilities from TEP/UES's power system. Whenever reasonably possible, advance notice will be given to the customer prior to such actions.

   f. The customer may be required by TEP/UES to modify the Facilities to accommodate special TEP/UES requirements, such as special metering, power factor correction capacitors, harmonic filters, telemetry, and protective devices.

   g. TEP/UES may require the customer to have written operating instructions delineating procedures, mutually agreed upon between TEP/UES and the customer, that are to be followed in the execution of both routine and emergency operations.

h. For customers operating Facilities in excess of their own power and energy needs and having primary voltage service, TEP/UES may require the customer to have full-time, qualified operations employees to operate the Facilities.

i. The customer must pay TEP/UES for any costs TEP/UES may incur as a result of the customer's Facilities.

j. The Customer agrees to defend, indemnify and hold harmless TEP/UES, its directors, officers, employees, and agents from any and all liability, loss, or damage (including, without limitation, damage to the TEP/UES's property) which TEP/UES, its directors, officers, employees, and agents may suffer as a result of any claim, demand, cost or judgment against it arising out of or in any way connected with the construction, installation and/or operation of the Facilities.

k. TEP/UES reserves the right to terminate the customer's interconnected use of these Facilities if they are not installed and operated within the guidelines established by TEP/UES.

l. An interconnection agreement between TEP/UES and the customer will be required for all Facilities that are to be operated in parallel with TEP/UES's power system.

m. The customer may need to meet additional requirements for this Facility. (Refer to TEP/UES's Interconnection Requirements for Distributed Generation).

n. The customer shall submit an interconnection application to TEP/UES prior to establishing parallel operation with TEP/UES's power system. The application and any required supplemental information shall be in accordance with TEP/UES's Interconnection Requirements for Distributed Generation. The application process allows TEP/UES to review the customer's proposed facilities for compliance with standards and to identify any necessary upgrades to TEP/UES facilities. The application is a necessary precursor to completing the interconnection agreement specified in Section 2.l. above.

o. TEP/UES may require the customer to arrange for inspection and testing of customer Facilities related to interconnection with the utility.

3. Customer-owned generating facilities intended solely for the purpose of supplying customer load during a TEP/UES power outage are not subject to the above requirements provided they conform to the following:

a. The customer's equipment must transfer load between the TEP/UES system and the generator in an open-transition or non-parallel mode allowing no opportunity for backfeed of the TEP/UES system.

b. Any automatic transfer scheme must employ a double-throw, “break-before-make” transfer switch of fail-safe design such that under no circumstances will the generating facility electrically interconnect with the TEP/UES system.

c. Customer shall furnish documentation verifying that the transfer scheme meets non-parallel requirements.

d. TEP/UES reserves the right to inspect any customer equipment that functions as part of the transfer operation prior to granting approval to place in service.

INTERCONNECTION REQUIREMENTS
INVERTER-BASED DISTRIBUTED GENERATION SOURCES
FOR SINGLE-PHASE CUSTOMER SERVICES

1. Purpose

These electric service requirements include information for use by the Service Provider and customers for interconnection and parallel operation of small inverter-based, distributed generation (DG) sources with the Service Provider's distribution system. The document is an application of SR-701 "GENERAL REQUIREMENTS FOR CUSTOMER INSTALLATION AND OPERATION OF DISTRIBUTED GENERATION SOURCES" along with the "DISTRIBUTED GENERATION INTERCONNECTION REQUIREMENTS (DGIR)" as filed with and approved by the Arizona Corporation Commission (ACC). The requirements presented are to ensure the safety of both utility and customer personnel and property.

2. Applicability

This document applies to all distributed generation sources, single-phase, inverter-based, capable of parallel operation with the Service Provider's distribution system. It pertains only to interconnection with single-phase, 120/240V, 3-wire services. For interconnection with three-phase services, please refer to SR-703.

3. Definitions

Backfeed: To energize a section of the Service Provider's distribution system from a generation source other than the Service Provider.

Disconnect Switch: A visible open disconnect device that the customer is required to install and maintain in accordance with the requirements herein. It will completely isolate the customer's generating facility from the Service Provider grid.

Distributed Generation (DG): Any type of customer electrical generator, static inverter, or generating facility interconnected with the distribution system that either (1) has the capability of being operated in electrical parallel with the distribution system or (2) can feed a customer load that can also be fed by the distribution system.

Distributed Generation Interconnection Requirements (DGIR): Document conformed to ACC Docket No. E-00000A-99-0431 Decision No. 69674, dated June 28, 2007, that describes, procedural, administrative, and technical requirements for the interconnection of DG to the Service Provider's distribution system for the purpose of parallel operation. The DGIR document can be found at the following link: https://www.tep.com/wp-content/uploads/2016/04/dgir.pdf

Distribution System: The infrastructure constructed, maintained, and operated by the Service Provider to deliver electric service to retail customers at primary and secondary distribution voltages (13.8kV and less).

Generating Facility: All or part of the customer's electrical generator(s) and/or inverter(s) together with all protective, safety, and associated equipment necessary to produce electric power at the customer's facility.

Island: A condition in which a portion of the Service Provider's distribution system is energized solely by one or more customer generating facilities through the associated point(s) of interconnection while that portion of the Service Provider distribution system is electrically separated from the rest of the Service Provider distribution system.

Line Side (Supply Side) Interconnection: Interconnection of the customer generation output between the Service Provider revenue meter and the customer main service disconnect(s).

Load Side Interconnection: Interconnection of the customer generation output at a point on the customer-side of a main service disconnect.

3. Definitions (cont'd)

Parallel System: A generating facility that is electrically interconnected to a bus common with the Service Provider distribution system, either on a momentary or continuous basis.

Point of Interconnection: The physical location where the DG conductors are connected to the customer's service.

Service Provider: A regulated electric utility that furnishes electric power and associated metering services to retail electrical customers in its defined service area. For purposes of this document, Service Provider will connote either Tucson Electric Power Company or Unisource Energy Services.

Static Inverter: A power electronic device that converts DC power to AC by means of electronic switching. For purposes of this document, only those static inverters designed to automatically separate from the Service Provider system upon loss of utility voltage and prior to reclosing of the Service Provider feeder breaker shall be acceptable for interconnection of DG systems.

(a) String Inverter: A single static inverter designed to receive the DC output of a string of series connected solar photovoltaic panels.

(b) Micro-inverter: An inverter integral with an individual solar photovoltaic panel that performs DC to AC voltage conversion so that panel output power is an AC waveform. Individual micro-inverter panel outputs are typically routed to a combiner panel for collective output on to the point of interconnection.

4. Standards

All customer equipment shall conform to the nationally-recognized standards and recommended practices. These include, but are not limited to, the following:

(a) NFPA 70 - National Electrical Code (NEC)

(b) IEEE 1547 - Standard for Interconnecting Distributed Resources with Electric Power Systems

(c) IEEE 1547.1 - Standard for Conformance Test Procedures for Equipment Interconnecting Distributed Resources with Electric Power Systems

(d) IEEE 519 - Recommended Practices and Requirements for Harmonic Control in Electrical Power Systems

(e) ANSI C84.1- Electric Power Systems and Equipment-Voltage Ratings (60Hz)

(f) UL 1741- Inverters, Converters, Controllers and Interconnection System Equipment for Use with Distributed Energy Resources

5. Service Provider Design Review and Approval

Prior to installation of customer interconnection facilities, customer shall submit a DG interconnection application to the Service Provider for review and written approval. Application forms may be found on the Service Provider's website. Documentation to be furnished with the application may include an electrical one-line diagram, an electrical three-line diagram, site plan, and equipment elevation drawings. Following approval, customer shall not remove, alter, modify, or change the equipment specifications, including, without limitation, the plans, control and protective devices or settings, and the generating facility system design, type, size, or configuration. If the customer desires to make such changes or modifications, they must revise and resubmit plans describing the changes or modifications for approval. No such change or modification may be made without prior approval.

6. Metering Requirements

(a) General:

The customer shall provide and install a meter socket, in accordance with Service Provider requirements, to meter the generator output. This is referred to as the production or DG meter socket. Equipment should be selected from the approved material list in SR-452. (At present, for residential single-phase DG systems only, Service Provider will furnish a DG meter socket to the customer if they so request.) Service Provider will furnish and install the DG meter.

Under no circumstances shall any metering enclosure be used as a conduit or raceway for any conductors other than those phase conductors being metered and the associated grounded conductor (neutral) and grounding conductor (equipment ground).

No loads, technologies, or strategies not related to the customer's generating facility may divert, for any purpose, DG energy that would otherwise have been metered as DG production.

(b) Arrangement and Location:

The DG meter shall be located within 10 feet of the revenue meter. Variances may be granted following engineering review for projects that request a variance in the application prior to construction and demonstrate a need. Variances are not granted based on convenience or preference.

(c) Meter Socket Identification:

The DG meter socket shall be labeled "Distributed Generation Meter" and shall employ signage as shown in pages 6, 8, 10, and 12 of this SR. Service Provider will furnish the required warning placard to the customer through their distributor, Border States Electric.

(d) Meter Socket Heights:

Minimum and maximum meter socket heights shall be as specified in SR-405 page 2.

(e) Equipment Protection and Grounding:

Meter sockets and all related metering enclosures and equipment shall be grounded in accordance with the NEC and/or any applicable local codes.

(f) Working Space:

Working space requirements for all metering equipment shall be as specified in SR-405 page 10.

7. Disconnect Switches

(a) General:

As required by the DGIR, the customer shall provide and install a DG disconnect switch to isolate all ungrounded conductors of the generating facility from the Service Provider system. The switch shall be a gang-operated load-break device with a visible air-gap in the open position. It shall be rated for the current and voltage requirements of the generating facility and shall be lockable in the open position.

For residential single-phase DG systems requesting load side interconnection only, the Service Provider will furnish a DG disconnect switch to the customer, if they so request.

Under no circumstances shall any DG disconnect switch enclosure be used as a conduit or raceway for any conductors other than the metered phase conductors, associated grounded conductor (neutral) and associated grounding conductor (equipment ground) of the DG output circuit. All phase conductors shall be terminated on appropriate terminals inside the switch enclosure.

(b) Arrangement and Location:

The DG disconnect switch and all required meter switches shall be located within 10 feet of the customer's revenue meter and installed between the revenue meter and the DG meter. Variances may be granted following engineering review for projects that request a variance in the application prior to construction and demonstrate a need. Variances are not granted based on convenience or preference. Switch installations shall be accessible and operable to Service Provider personnel at all times.

7. **Disconnect Switches (cont'd)**

(c) Labeling:
The DG disconnect switch shall be labeled "Utility DG Disconnect" and shall employ signage as shown in pages 6, 8, 10, and 12 of this SR. Service Provider will furnish the required warning label to the customer through their distributor, Border States Electric.

(d) Equipment Protection and Grounding:
DG disconnect switch enclosures shall be grounded in accordance with the NEC and/or any applicable local codes.

8. Technical Requirements

(a) Line Side Interconnections
For line side interconnections, as are permitted by NEC, the following requirements apply:

(1) A line side interconnection constitutes a new service as defined by the NEC and is subject to all applicable NEC requirements and/or requirements adopted by the local code-enforcement authority.

(2) Customer is required to arrange a power-kill with Service Provider to de-energize customer equipment before performing line side interconnection work. The Service Provider will energize this service only after the facility has passed inspection by both the Service Provider Design Department and the applicable government agency. Notification from the government agency must be received by the Service Provider as described in the process for new services elsewhere in these Service Requirements.

(3) Any line side interconnection shall be made without modifications to any factory installed and/or factory listed equipment or components. Please contact Service Provider Design Department for additional guidance regarding this matter.

(4) For 200A Milbank meter sockets only, customer may install Milbank tap connectors, catalog number KA77-INT, to complete the line side interconnection inside the revenue meter base enclosure. See pages 10 and 11 for this SR for further information.

(b) Minimum Protective Requirements

(1) Inverter shall be set to detect and trip for any abnormal operating condition on the Service Provider's system.

(2) Circuit breakers, if backfed, shall be suitable for such operation.

(3) Static inverters shall be tested to UL 1741 by a Nationally Recognized Testing Laboratory (NRTL) certified by OSHA to perform the UL 1741 test standard.

(c) Distribution Transformer

(1) Customer's single-phase generator can only be connected to the Service Provider's single-phase distribution transformers.

(2) Customer generators with a combined total rating of over 10 kWAC, as measured at the service entrance, will be required to be isolated from other customers served from the same Service provider transformer. This will be accomplished by installing a separate dedicated transformer to serve only the customer with DG in excess of 10 kWAC. All work necessary to modify existing Service Provider facilities to accommodate customer-owned DG shall be done at the customer's expense.

9. Customer Operating Requirements

(a) Quality of Service:

The operation of the customer's generation facility must not reduce the quality of service of the distribution system to the other Service Provider customers. No abnormal voltages, currents, frequencies, or interruptions are permitted.

(b) De-energized Service Provider Circuit:

The customer will at no time energize a de-energized Service Provider's circuit.

(c) Inhibited Parallel Operation

(1) If the Service Provider circuit is de-energized, the inverter shall not attempt to reconnect their system until power has been restored. The inverter shall delay reconnection for parallel operation of it's generating facilities for a minimum of five minutes after the Service Provider voltage and frequency are restored to normal. Service Provider is not responsible for damage caused to the customer's facility as a result of automatic or manual reclosing of distribution feeder breakers or reclosers.

(2) The customer is not prohibited from isolating their system from the Service Provider and supplying their own premise wiring while the Service Provider's circuit is de-energized.

(d) Customer Responsibility for Damage Caused by Customer Generating Facilities:

The customer is responsible for damage caused to other customers and to the Service Provider as a result of improper operation or malfunction of their generation facilities.

(e) Service Provider:

Service Provider is not responsible for damage caused to other customers and to Service Provider's facilities as a result of improper operation or malfunction of the customer's generating facilities.

(f) Inverter that Provides backup Power:

Any inverter providing a backup power supply for utility outages must separate from the Service Provider as required by UL 1741. Inverters approved for this function include: SMA TL-22 series.

Tucson Electric Power TEP UniSourceEnergy SERVICES SANTA CRUZ COUNTY

INITIATED BY	ESR COMM.
DM	9-17

REVISION NO.	ESR COMM.	EFFECTIVE DATE
1	3-18	3-18

SR-702 1
Pg. 6 of 12

DRAWING 1A

LOAD SIDE INTERCONNECTION LAYOUT
SINGLE-PHASE SERVICE
400A AND LESS

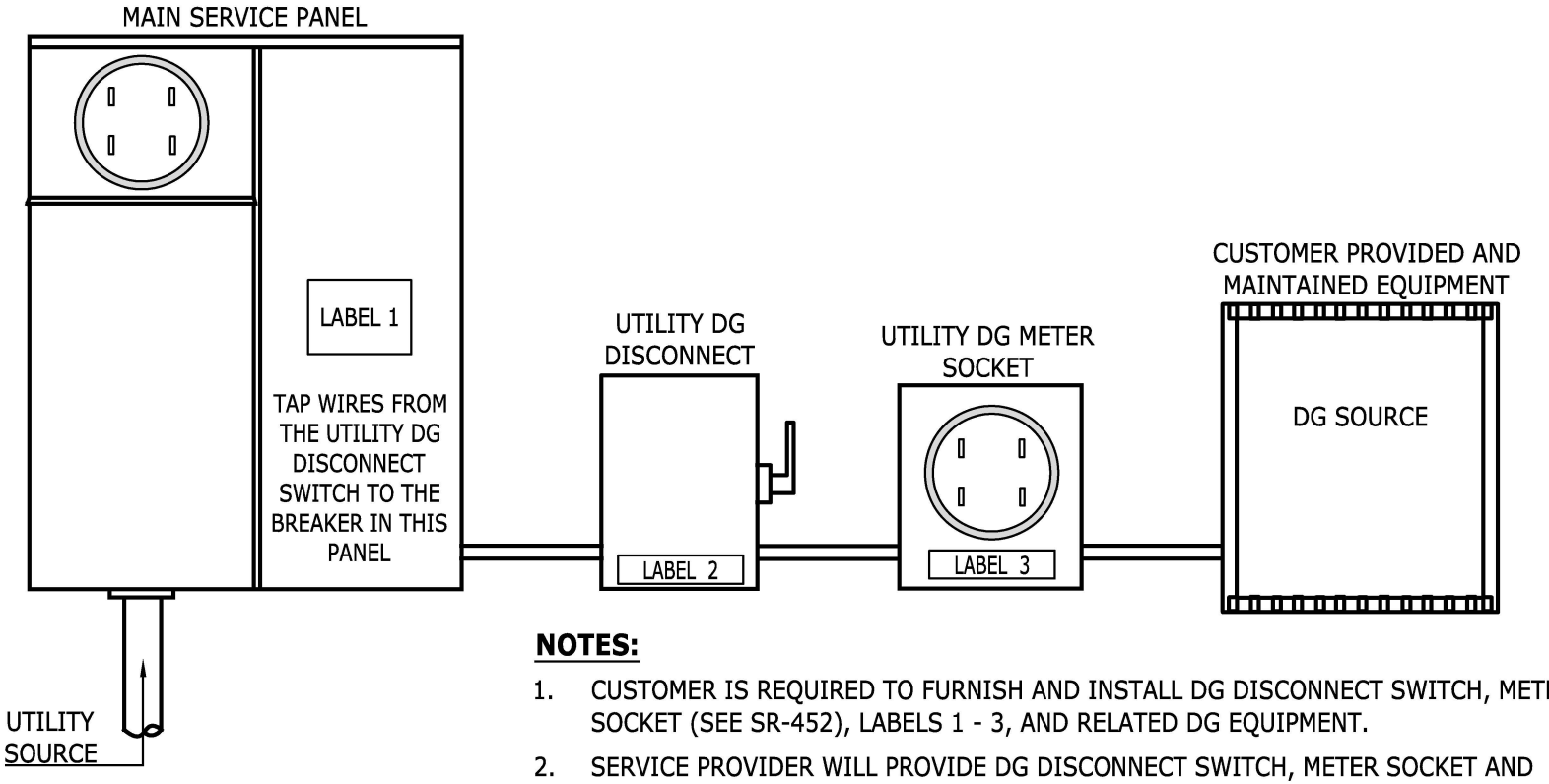

NOTES:

1. CUSTOMER IS REQUIRED TO FURNISH AND INSTALL DG DISCONNECT SWITCH, METER SOCKET (SEE SR-452), LABELS 1 - 3, AND RELATED DG EQUIPMENT.
2. SERVICE PROVIDER WILL PROVIDE DG DISCONNECT SWITCH, METER SOCKET AND LABELS ONLY FOR APPROVED SINGLE-PHASE RESIDENTIAL APPLICANTS.
3. DG METER PROVIDED AND INSTALLED BY SERVICE PROVIDER.
4. A GOVERNMENTAL AGENCY CLEARANCE IS REQUIRED FOR ALL DG INSTALLATIONS.
5. LABELS ARE AVAILABLE FOR PURCHASE AT BORDER STATES ELECTRIC 294-1414.



LABEL 1
2-15-1912



LABEL 2
2-15-1913

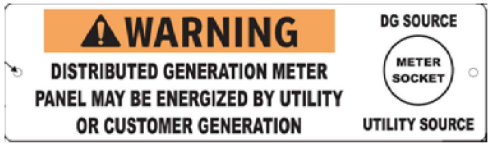

LABEL 3
2-15-1911

Tucson Electric Power

TEP

UniSourceEnergy SERVICES
SANTA CRUZ COUNTY

INITIATED BY	DM
ESR COMM.	9-17

REVISION NO.	1
ESR COMM.	3-18
EFFECTIVE DATE	3-18

SR-702 1

Pg. 7 of 12

FORMERLY SR-704, page 1

DRAWING 1B

LOAD SIDE INTERCONNECTION WIRING
SINGLE-PHASE SERVICE
400A AND LESS

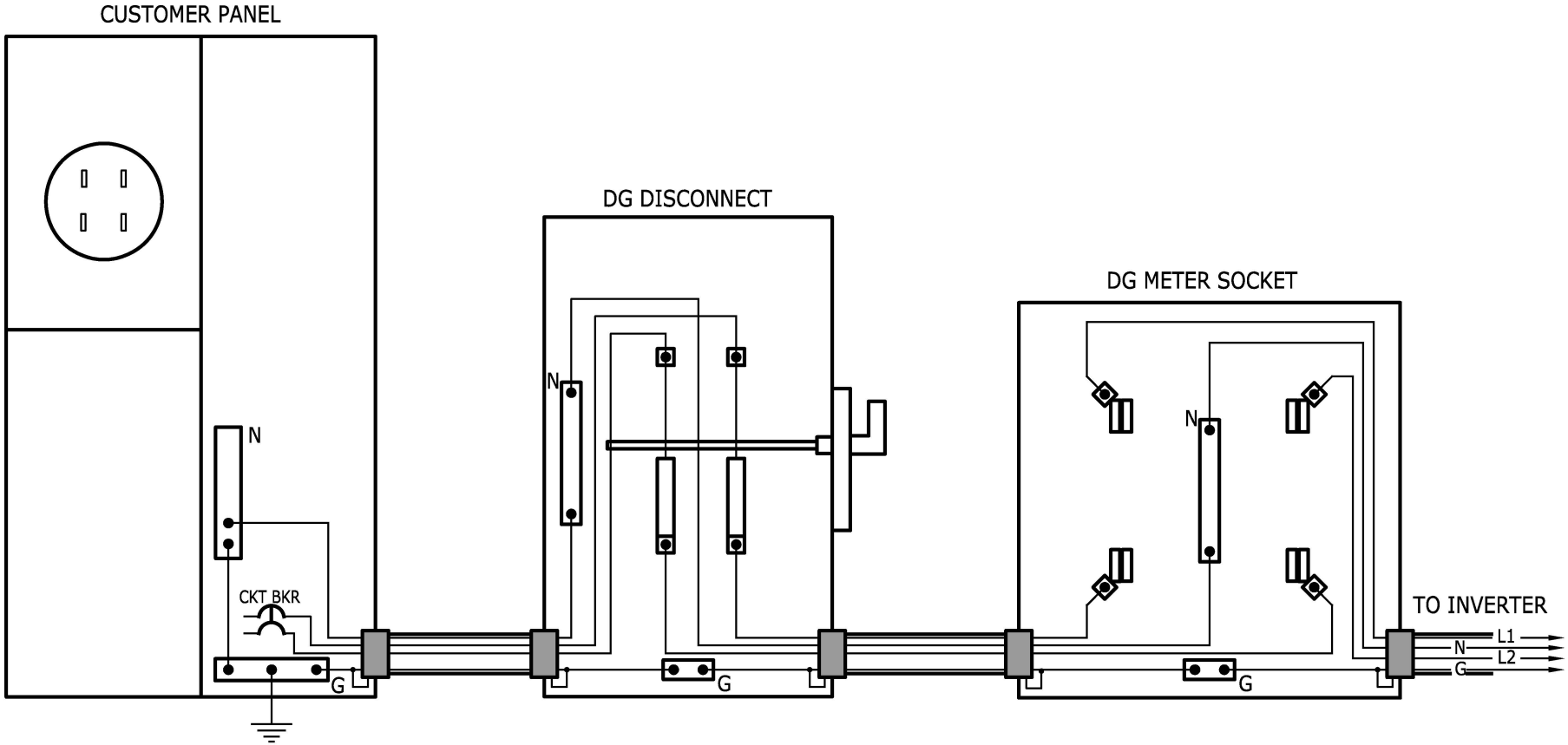

NOTE:

1. A NEUTRAL MUST BE RUN FROM CUSTOMER PANEL TO DG METER SOCKET AND TERMINATED ON THE NEUTRAL BUS FOR DG SYSTEMS THAT MAY NOT REQUIRE A NEUTRAL TO OPERATE.

LINE SIDE TAP INTERCONNECTION LAYOUT
SINGLE-PHASE SERVICE
400A AND LESS

DRAWING 2A

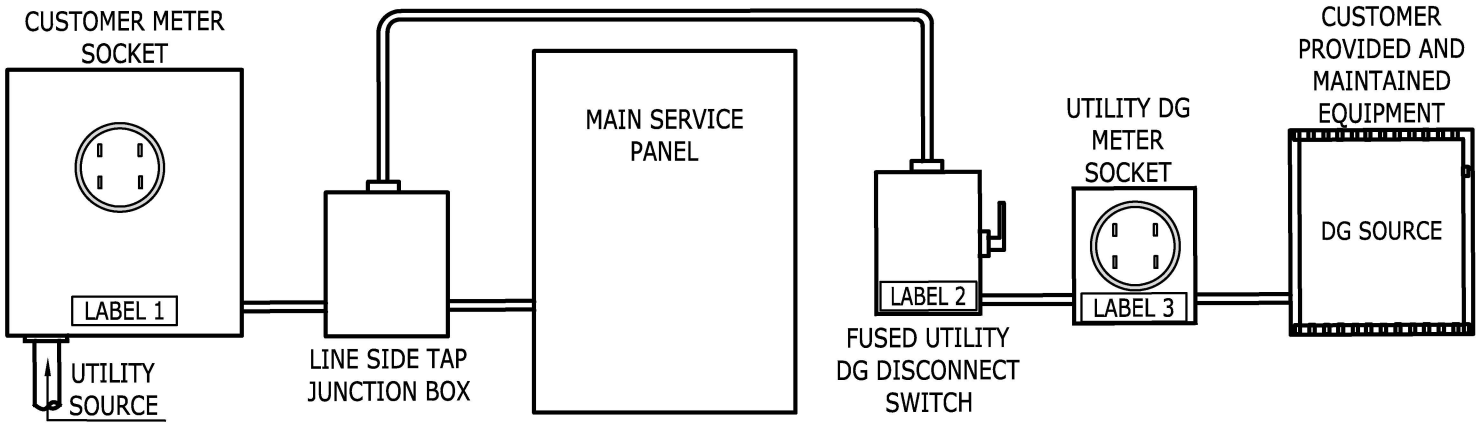

NOTES:

1. CUSTOMER IS REQUIRED TO FURNISH AND INSTALL DG DISCONNECT SWITCH, METER SOCKET (SEE SR-452), LABELS 1 - 3, AND RELATED DG EQUIPMENT.
2. SERVICE PROVIDER WILL PROVIDE METER SOCKET AND LABELS ONLY FOR APPROVED SINGLE-PHASE RESIDENTIAL APPLICANTS.
3. DG METER PROVIDED AND INSTALLED BY SERVICE PROVIDER.
4. A SERVICE PROVIDER DESIGN DEPARTMENT INSPECTION IS REQUIRED FOR APPROVAL.
5. A GOVERNMENTAL AGENCY CLEARANCE IS REQUIRED FOR ALL DG INSTALLATIONS.
6. LABELS ARE AVAILABLE FOR PURCHASE AT BORDER STATES ELECTRIC 294-1414.
7. LINE SIDE TAPS ARE NOT ALLOWED INSIDE THE CUSTOMER SERVICE PANEL. TAPS SHALL BE MADE INSIDE AN APPROVED JUNCTION BOX USING TAP (LUG) TYPE CONNECTORS.
8. JUNCTION BOX SHALL BE HOFFMAN CATALOG # A12R126 OR EQUAL. LARGER DIMENSION BOXES ARE ACCEPTABLE IF THEY MEET THE SAME REQUIREMENTS AS THE A12R126.
9. SINGLE PHASE CUSTOMER METER SOCKET MUST BE WIRED PER SR-408. IF LOCATION OF JUNCTION BOX NECESSITATES A VARIANCE TO SR-408, CUSTOMER MUST USE A MILBANK CATALOG # U4518-XL-W SOCKET OR EQUAL TO ALLOW FOR ADEQUATE SPACE FOR WIRING ROUTING.
10. CUSTOMER MAY RE-USE AN EXISTING ALL-IN-ONE PANEL AS A LOAD CENTER ONLY.



LABEL 1
2-15-1912



LABEL 2
2-15-1913

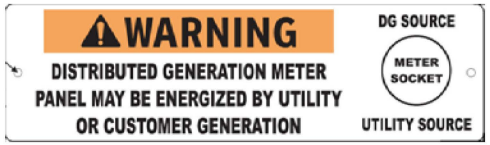

LABEL 3
2-15-1911

Tucson Electric Power
TEP
UniSourceEnergy SERVICES
SANTA CRUZ COUNTY

INITIATED BY	ESR COMM.
DM	9-17

REVISION NO.	ESR COMM.	EFFECTIVE DATE
1	3-18	3-18

SR-702 1
Pg. 8 of 12

FORMERLY SR-702, page 7

Tucson Electric Power

TEP

UniSourceEnergy SERVICES
SANTA CRUZ COUNTY

INITIATED BY	ESR COMM.
DM	9-19

REVISION NO.	ESR COMM.	EFFECTIVE DATE
1	3-18	3-18

SR-702 1

Pg. 9 of 12

FORMERLY SR-704, page 2

DRAWING 2B

LINE SIDE TAP INTERCONNECTION WIRING
SINGLE-PHASE SERVICE
400A AND LESS

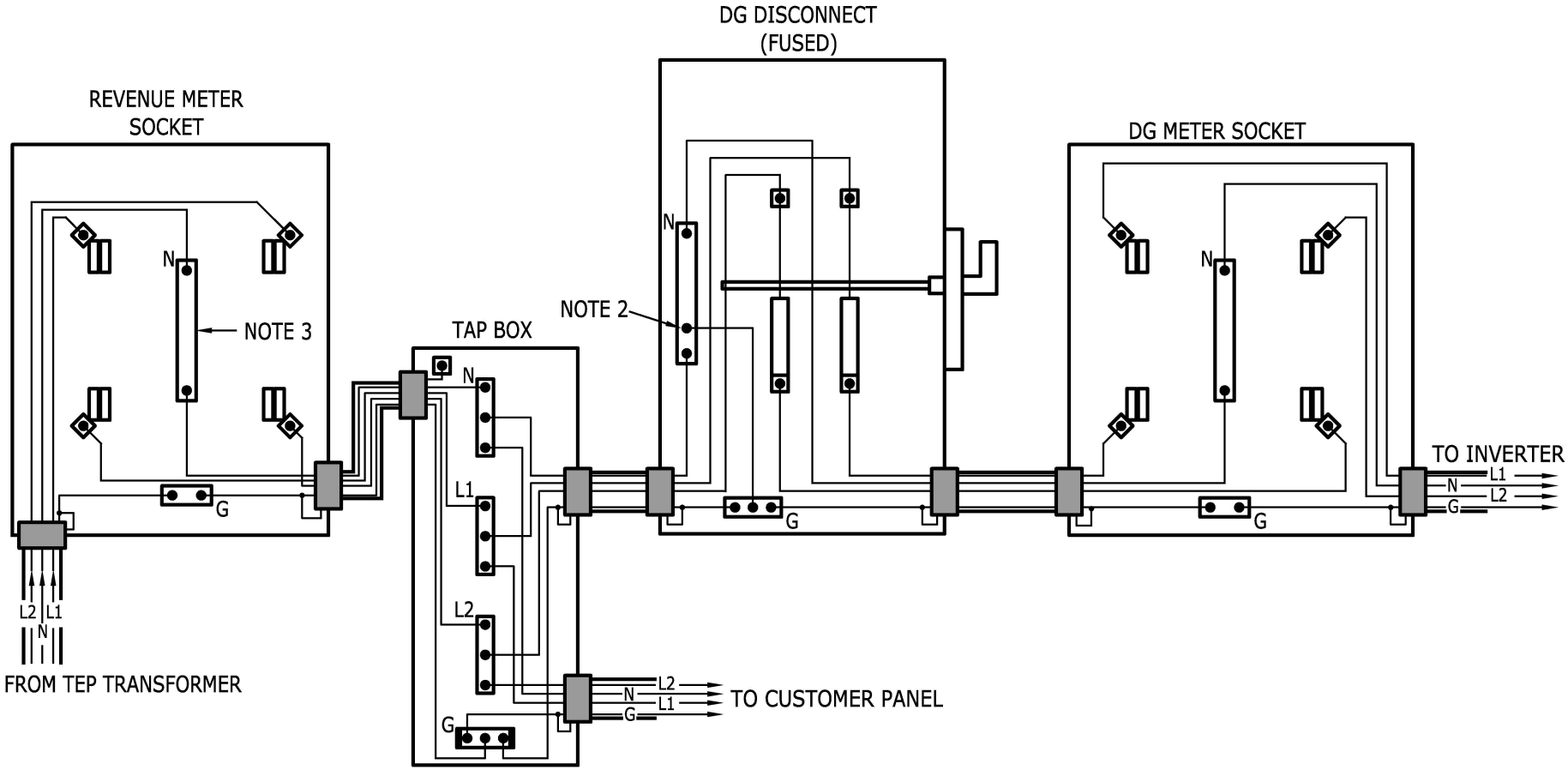

NOTES:

1. LINE SIDE TAP MUST BE MADE USING LUG-TYPE CONNECTORS.
2. FUSED DISCONNECT NEUTRAL MUST BE BONDED TO GROUND FOR LINE SIDE TAP.
3. NEUTRAL CONNECTOR MUST BE BONDED TO SOCKET ENCLOSURE.
4. A NEUTRAL MUST BE RUN FROM TAP BOX TO DG METER SOCKET AND TERMINATED ON THE NEUTRAL BUS FOR DG SYSTEMS THAT MAY NOT REQUIRE A NEUTRAL TO OPERATE.

DRAWING 3

LINE SIDE INTERCONNECTION LAYOUT
METER SOCKET TAP CONNECTOR
SINGLE-PHASE SERVICE, 200A

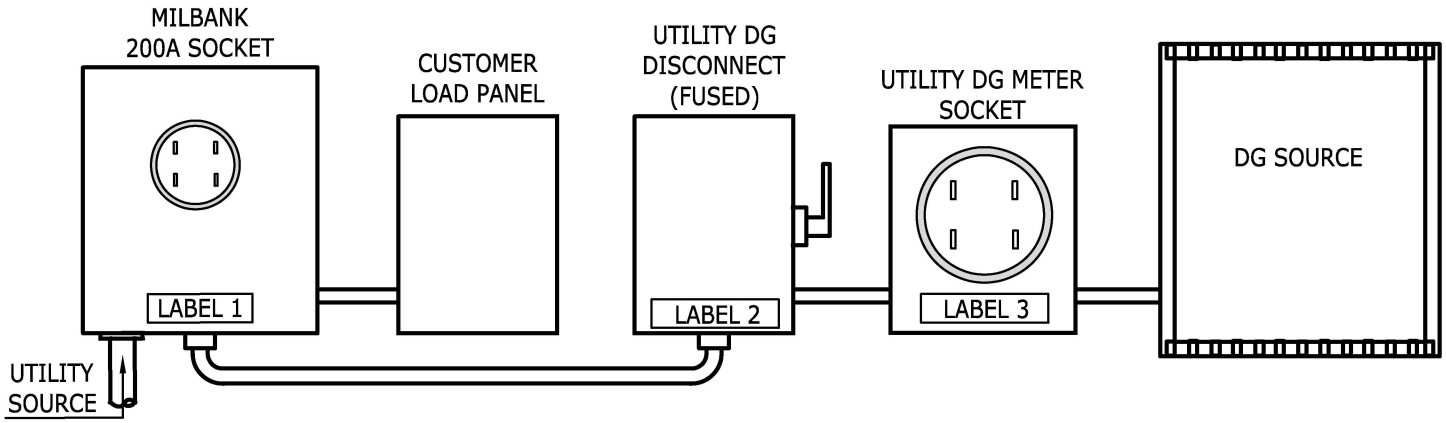

NOTES:

1. CUSTOMER IS REQUIRED TO FURNISH AND INSTALL THE DG DISCONNECT SWITCH, DG METER SOCKET (SEE SR-452), LABELS 1 - 3 AND RELATED DG EQUIPMENT.
2. DG METER PROVIDED AND INSTALLED BY SERVICE PROVIDER.
3. A GOVERNMENTAL AGENCY CLEARANCE IS REQUIRED FOR ALL DG INSTALLATIONS.
4. LABELS ARE AVAILABLE FOR PURCHASE AT BORDER STATES ELECTRIC 294-1414.



LABEL 1
2-15-1912



LABEL 2
2-15-1913

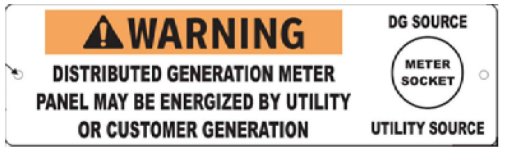

LABEL 3
2-15-1911

Tucson Electric Power
TEP
UniSourceEnergy
SERVICES
SANTA CRUZ COUNTY

INITIATED BY	REVISION NO.
ESR COMM.	ESR COMM.
DM	EFFECTIVE DATE
9-17	3-18
	3-18

SR-702 1
Pg. 10 of 12

Tucson Electric Power

TEP

UniSourceEnergy SERVICES SANTA CRUZ COUNTY

DRAWING 4

CUSTOMER OWNED DG
LINE SIDE TAP INTERCONNECTION WIRING
(DUAL LUG TAP CONNECTORS)

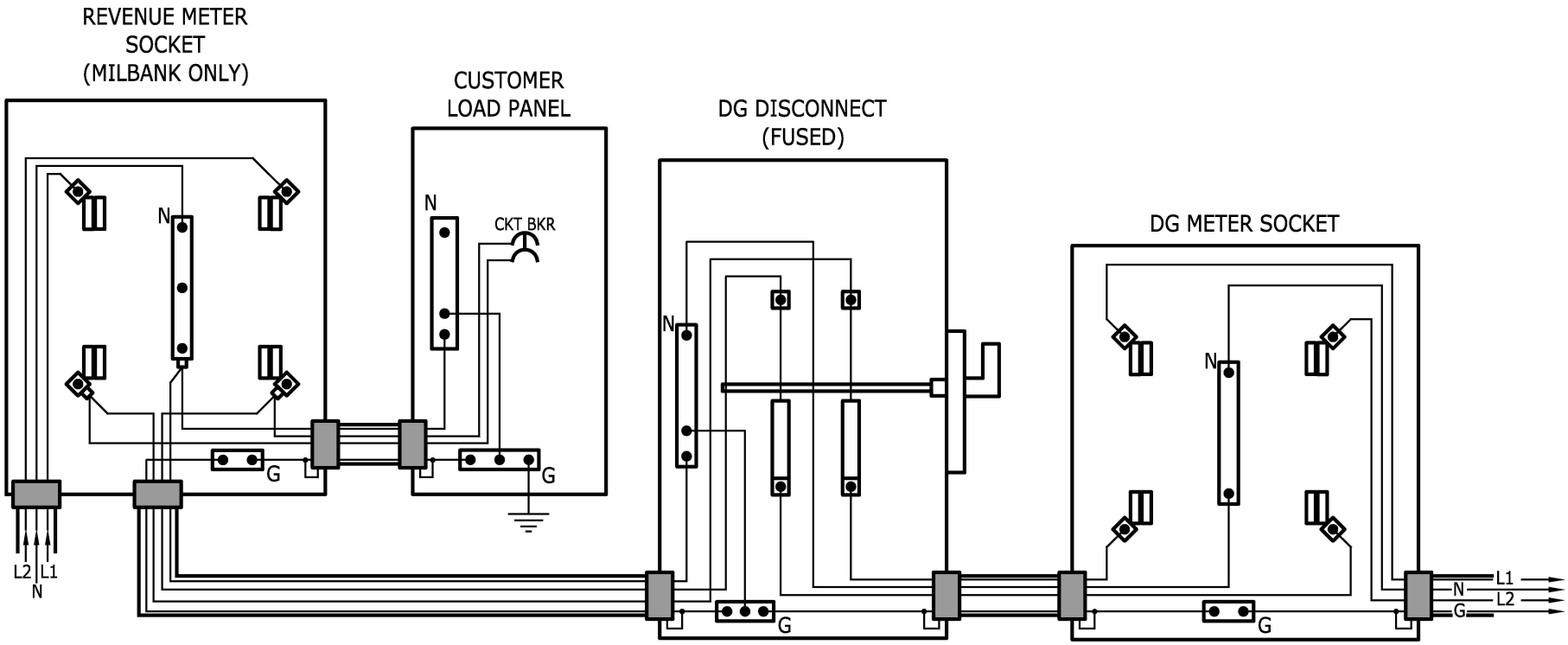

NOTES:

1. METER SOCKET MUST BE MILBANK, CATALOG No. U4518-XL-W.
2. TAP CONNECTORS MUST BE MILBANK, CATALOG No. K4977-INT.
3. USE GREEN BONDING SCREW TO BOND NEUTRAL BUS TO ENCLOSURE.
4. LABEL CONDUIT WITH "DG TAP CONDUCTORS".
5. A NEUTRAL MUST BE RUN FROM REVENUE METER SOCKET TO DG METER SOCKET AND TERMINATED ON THE NEUTRAL BUS FOR DG SYSTEMS THAT MAY NOT REQUIRE A NEUTRAL TO OPERATE.

INITIATED BY	REVISION NO.
ESR COMM.	DM
3-18	0
EFFECTIVE DATE	ESR COMM.
3-18	-

SR-702

Tucson Electric Power

TEP UniSourceEnergy SERVICES SANTA CRUZ COUNTY

INITIATED BY	ESR COMM.
DM	3-18

REVISION NO.	ESR COMM.	EFFECTIVE DATE
0	-	3-18

SR-702

Pg. 12 of 12

FORMERLY SR-702, page 9

SERVICE CONNECTION DETAIL
MULTI-METER INSTALLATIONS

DRAWING 5

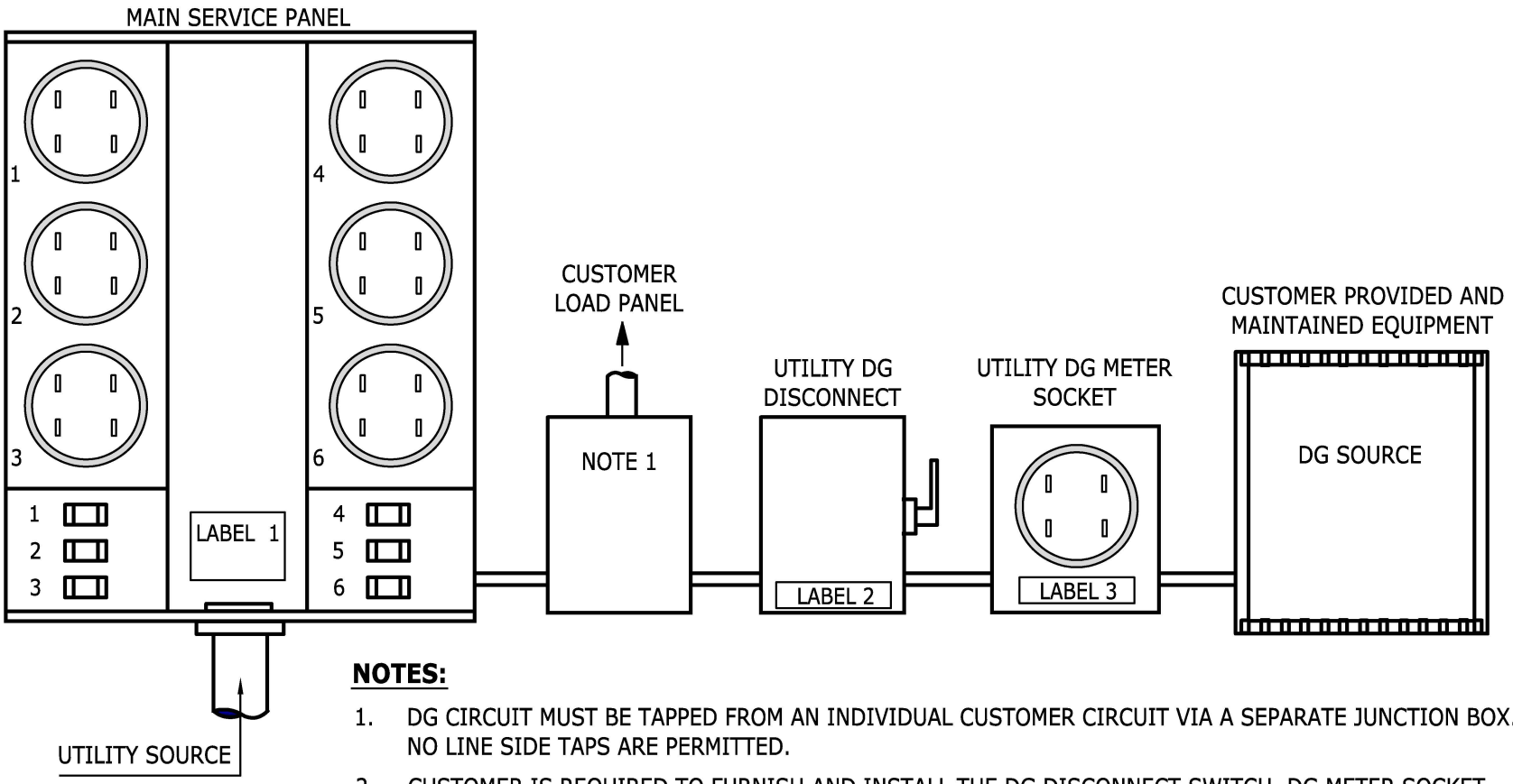

NOTES:

1. DG CIRCUIT MUST BE TAPPED FROM AN INDIVIDUAL CUSTOMER CIRCUIT VIA A SEPARATE JUNCTION BOX. NO LINE SIDE TAPS ARE PERMITTED.
2. CUSTOMER IS REQUIRED TO FURNISH AND INSTALL THE DG DISCONNECT SWITCH, DG METER SOCKET (SEE SR-452), LABELS 1 - 3 AND RELATED DG EQUIPMENT.
3. DG METER PROVIDED AND INSTALLED BY SERVICE PROVIDER.
4. A GOVERNMENTAL AGENCY CLEARANCE IS REQUIRED FOR ALL DG INSTALLATIONS.
5. LABELS ARE AVAILABLE FOR PURCHASE AT BORDER STATES ELECTRIC 294-1414.



LABEL 1
2-15-1912



LABEL 2
2-15-1913

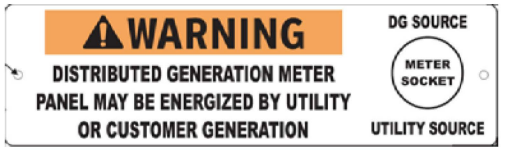

LABEL 3
2-15-1911

ELECTRIC SERVICE REQUIREMENTS FOR MEDIUM-SIZED COMMERCIAL INTERCONNECTED DISTRIBUTED GENERATION SOURCES

1. Purpose

These electric service requirements include information and criteria for use by TEP/UES employees and customers in regard to the interconnection and parallel operation of small distributed generation sources with TEP/UES's distribution system. The document is intended as an application of the TEP/UES policy "Customer Installation and Operation of Interconnected Distributed Generation Sources" set forth in SR-701. The requirements presented herein are to ensure the safety of both TEP and customer personnel and property.

2. Applicability

This document applies to all three-phase distributed generation sources, above 50 kWac to 300 kWac nameplate rating, capable of parallel operation with TEP/UES's system. Any generation source larger than 300 kWac requires review and approval by TEP Engineering and may entail additional requirements beyond those detailed in this document.

3. Definitions

Backfeed: To energize a section of the TEP/UES distribution system from a generation source other than TEP/UES.

Disconnect Switch: A visible open disconnect device that the customer is required to install and maintain in accordance with the requirements set forth herein. It will completely isolate the customer's generating facility from the TEP/UES grid.

Distributed Generation (DG): Any type of customer electrical generator, static inverter, or generating facility that has the capability of being operated in electrical parallel with the TEP/UES distribution system.

Distribution System: The infrastructure constructed, maintained, and operated by TEP/UES to deliver electric service to retail customers at primary and secondary distribution voltages (13.8kV and less).

Generating Facility: All or part of the customer's electrical generator(s) or inverter(s) together with all protective, safety, and associated equipment necessary to produce electric power at the customer's facility.

Island: A condition in which a portion of the TEP/UES electric power system is energized solely by one or more customer generating facilities through the associated point(s) of interconnection while that portion of the TEP/UES electric power system is electrically separated from the rest of the TEP/UES electric power system.

Parallel System: A generating facility that is electrically interconnected to a bus common with the TEP electric distribution system, either on a momentary or continuous basis.

Point of Interconnection (Delivery): The physical location where TEP/UES service conductors are connected to the customer's service conductors to allow parallel operation of the customer's generating facility with the TEP/UES electric distribution system.

Static Inverter: A power electronic device that converts DC power to AC by means of electronic switching. For purposes of this document, only those static inverters designed to automatically separate from the TEP/UES system upon loss of utility voltage and prior to reclosing of the TEP/UES feeder breaker shall be acceptable for interconnection of DG systems.

4. Standards

All customer equipment shall conform to the nationally-recognized standards and recommended practices. These include, but are not limited to the following:

(a) NFPA 70--National Electrical Code (NEC)
(b) IEEE 1547--Standard for Interconnecting Distributed Resources with Electric Power Systems
(c) IEEE 1547.1--Standard for Conformance Test Procedures for Equipment Interconnecting Distributed Resources with Electric Power Systems
(d) IEEE 929--Recommended Practice for Utility Interface of Photovoltaic Systems
(e) IEEE 519--Recommended Practices and Requirements for Harmonic Control in Electrical Power Systems
(f) ANSI C84.1--Electric Power Systems and Equipment--Voltage Ratings (60Hz)
(g) UL 1741--Inverters, Converters, Controllers and Interconnection System Equipment for Use with Distributed Energy Resources

5. TEP/UES Design review and Approval

Prior to installation of customer interconnection facilities, customer shall submit a distributed generation interconnection application for TEP/UES's review and written approval. Appropriate application forms may be found at **www.tep.com**. Required documentation to be furnished with the application may include an electrical one-line diagram, an electrical three-line diagram, AC and DC control schematics, plant location diagram, and site plan. Following TEP/UES approval, customer shall not remove, alter or otherwise modify or change the equipment specifications, including, without limitation, the plans, control and protective devices or settings, and the generating facility system design, type, size or configuration. If the customer desires to make such changes or modifications, the customer must revise and resubmit to TEP/UES plans describing the changes or modifications for approval by TEP/UES. No such change or modification may be made without prior approval of TEP/UES.

6. Metering Requirements

(a) General:

The customer shall provide and install all necessary metering sockets and cabinets in accordance with TEP/UES service requirements, in locations acceptable to TEP/UES. TEP/UES will furnish and install the revenue meter (or revenue net meter) at the point of delivery to the customer's facility. TEP/UES also requires a generator output (or production) meter and will furnish and install such meter. Required equipment should be selected from the approved material list in SR-452.

Under no circumstances shall any metering enclosure be used as a conduit or raceway for any conductors other than those phase conductors being metered and the associated grounded conductor (neutral) and grounding conductor (equipment ground). Also, the customer shall not make any connection or termination on the utility side of the metering enclosure.

No loads, technologies, or strategies may divert, for any purpose, DG energy that would have otherwise been metered as DG production.

6. Metering Requirements (cont'd)

(b) Arrangement and Location:
The revenue meter shall be located at the point of delivery to the customer's facility which is typically at or near the service entrance section. Meter location shall also comply with the requirements of SR-405 pages 3 through 5 of 10. The generator output meter shall be located within 10 feet of the revenue meter. Exceptions to this may be granted following engineering review and provided that appropriate labeling criteria are met. Refer to Drawings 1 for further details.

(c) Meter Socket Identification:
Revenue meter socket identification shall be as required by SR-405 page 2 of 10. The generation meter socket shall be labeled "Distributed Generation Meter" and shall employ signage as shown in Drawings 1.

(d) Meter Socket Heights:
Minimum and maximum meter socket heights shall be as specified in SR-405 page 2 of 10.

(e) Equipment Protection and Grounding:
Customer shall provide and install protective cabinets or other approved enclosures for all meters and metering equipment in accordance with SR-405 page 5 of 10 when required by TEP/UES. Meter sockets and all related metering enclosures and equipment shall be grounded in compliance with the NEC and/or any applicable local codes.

(f) Working Space:
Working space requirements for all metering equipment shall be as specified in SR-405 page 10 of 10.

7. Disconnect Switches

(a) General:
As required by TEP/UES's Interconnection Requirements for Distributed Generation, the customer shall provide and install a disconnect switch to isolate all ungrounded conductors of the generating facility from the TEP/UES system. The switch shall be a gang-operated, load-break device with a visible air-gap in the open position. It shall be rated for the current and voltage requirements of the generating facility and shall be lockable in the open position. In addition to the DG Service disconnect switch, the customer shall also provide and install any required meter switches. For synchronous generators, an additional disconnect switch shall be installed between the DG meter and the generation source. Refer to SR-405 page 1 of 10 and Drawing 1 for further information.

Under no circumstances shall any DG disconnect switch enclosure be used as a conduit or raceway for conductors other than the phase, associated grounded conductor (neutral), and associated grounding conductor (equipment ground) of the DG output circuit. All Phase conductors shall be terminated on appropriate terminals inside the switch enclosure.

(b) Location:
The DG Service disconnect switch and all required meter switches shall be located within 10 feet of the customer's service entrance section. Exceptions to this policy may be granted based on engineering review. Switch installations shall be accessible and operable to TEP/UES personnel at all times.

(c) The DG Service disconnect switch shall be labeled as per the requirements of SR-1.20 and shall employ signage as shown in Drawing 1.

ELECTRIC SERVICE REQUIREMENTS FOR MEDIUM-SIZED COMMERCIAL INTERCONNECTED DISTRIBUTED GENERATION SOURCES

8. Technical Requirements

(a) Type of Service:

The type of distribution service available for medium-sized DG sources larger than 50 kWac up to 300 kWac is three-phase grounded wye. Available voltages are 208Y/120 4-wire and 480Y/277V 4-wire. Exceptions to this may be granted only after review and approval of TEP/UES Engineering.

(b) Line Side Taps:

In the case that a generator is connected or tapped to the line (TEP/UES) side of a service entrance main breaker, as may be permitted by the NEC, the following requirements apply:

1. A line side tap constitutes a new service as defined by the NEC and is subject to all applicable NEC requirements and/or requirements adopted by the local code-enforcement authority.

2. TEP/UES will energize this service only after the facility has passed the inspection of the applicable government agency and notification has been received by TEP/UES as is described in the process for new services elsewhere in these Service Requirements.

3. Any line side tap shall be made without modifications to any factory installed and/or factory listed equipment or components. Please contact the TEP/UES Design Department for additional guidance regarding this matter.

(c) Minimum Protective Requirements:

1. For generators capable of contributing fault current to the TEP/UES system, customer overcurrent protection shall be set to detect and trip for any fault between the customer's main breaker and TEP/UES's substation breaker prior to operation of the TEP/UES protective device. The customer's overcurrent device may trip either the customer's generator breaker or the customer's main breaker. Circuit breakers, if backfed, shall be suitable for such operation.

2. Overvoltage, undervoltage, overfrequency, and underfrequency protection shall be provided to separate the DG from the utility under adverse voltage and frequency conditions.

3. Synchronous generators require a synchronizing scheme in order to initiate and maintain parallel operation with the utility.

4. Phase and ground time and instantaneous overcurrent relays are required as part of the interconnection protection package. For DG installations not capable of supplying ground fault current for ground faults on the utility system, additional requirements may apply. See Section 8 (e) below for further information.

5. Overload tripping is required for any generator capable of sustained operation above its normal ampere rating.

6. Static inverters shall be tested to UL 1741 by a Nationally Recognized Testing Laboratory (NRTL) certified by OSHA to perform the UL 1741 test standard.

(d) Distribution Transformer

1. Customers' three-phase generators shall connect to the TEP/UES system through a TEP/UES wye - wye connected three-phase pad-mount transformers or wye - wye overhead three-phase transformer banks.

2. Customers with generators having a combined rating in the range of 50 kWac to 300 kWac will be required to be isolated from other customers fed off the same TEP/UES transformer. This can be accomplished by installing a separate transformer connecting to the TEP/UES distribution feeder that is dedicated to the customer with DG. All work necessary to modify existing TEP/UES facilities to accommodate customer-owned DG shall be done at the customer's expense.

8. Technical Requirements (cont'd)

(e) Effective Grounding of Distributed Generation:

Synchronous, induction, or inverter-based generation employing a three-wire output cannot supply current to a ground fault. Therefore, for any three-wire DG, the customer must furnish either a delta - grounded wye isolation transformer or a grounding transformer. The isolation transformer delta winding shall tie to the three-wire DG output. The grounded wye winding shall tie to the four-wire utility-sourced system. Exceptions may be granted for inverter-based generation if the inverter manufacturer can show that the inverter does not cause overvoltage during a utility ground fault. The inverter manufacturer will be required to present test data for verification. Test data shall include oscilloscope recordings of inverter output voltage during short circuit testing. Results of an open circuit test must also be provided demonstrating that the inverter does not over-modulate under such circumstances.

9. Customer Operations

This section provides the operating requirements that the customer must follow and the responsibilities that the customer must assume for the operating their generation in parallel to the TEP/UES system:

(a) Quality of service:

The operation of the customer's generation facility must not reduce the quality of service to the TEP/UES electric system or other TEP/UES customers. No abnormal voltages, currents, frequencies, or interruptions are permitted.

(b) De-energized TEP/UES circuit:

The customer will at no time energize a de-energized TEP/UES circuit.

(c) Inhibited parallel operation:

If while operating parallel to TEP/UES's system, any of the protective devices operate inhibiting parallel operation, the customer will perform the following procedures prior to attempting any further parallel operation with TEP/UES (Note: Static inverter based systems conforming to the technical requirements detailed above will automatically disconnect from the TEP system upon loss of utility voltage. It will remain disconnected until power is restored at which time it will wait five minutes to re-synchronize to TEP/UES's system):

1. Determine whether the TEP/UES circuit is energized or de-energized.
2. If TEP's circuit has been continuously energized, then the customer will not attempt to reconnect their system in parallel with the utility until the cause of a protective device misoperation has been corrected by a certified person and TEP/UES has inspected and is satisfied that the customer's system is operating properly.
3. If it is determined that the TEP/UES circuit is de-energized, the customer must not attempt to reconnect their system until it is confirmed by TEP/UES that power has been restored and TEP/UES's circuit is energized.
4. The customer is not prohibited from isolating their system from TEP/UES and supplying their own premise wiring while TEP/UES's circuit is de-energized.

(d) The customer is responsible for damage caused to other customers and to TEP/UES as a result of improper operation or malfunction of their generation facilities.

(e) TEP/UES is not responsible for damage caused to other customers and to TEP/UES as a result of improper operation or malfunction of the customer's generation facilities.

(f) The customer shall delay reconnection of its generation facilities to TEP/UES for a minimum of one minute after the TEP/UES voltage and frequency are restored to normal. TEP/UES is not responsible for damage caused to the customer's facility as a result of TEP/UES's automatic or manual reclosing of its distribution feeder breaker or recloser.

SERVICE CONNECTION DETAIL
THREE PHASE COMMERCIAL

DRAWING 1

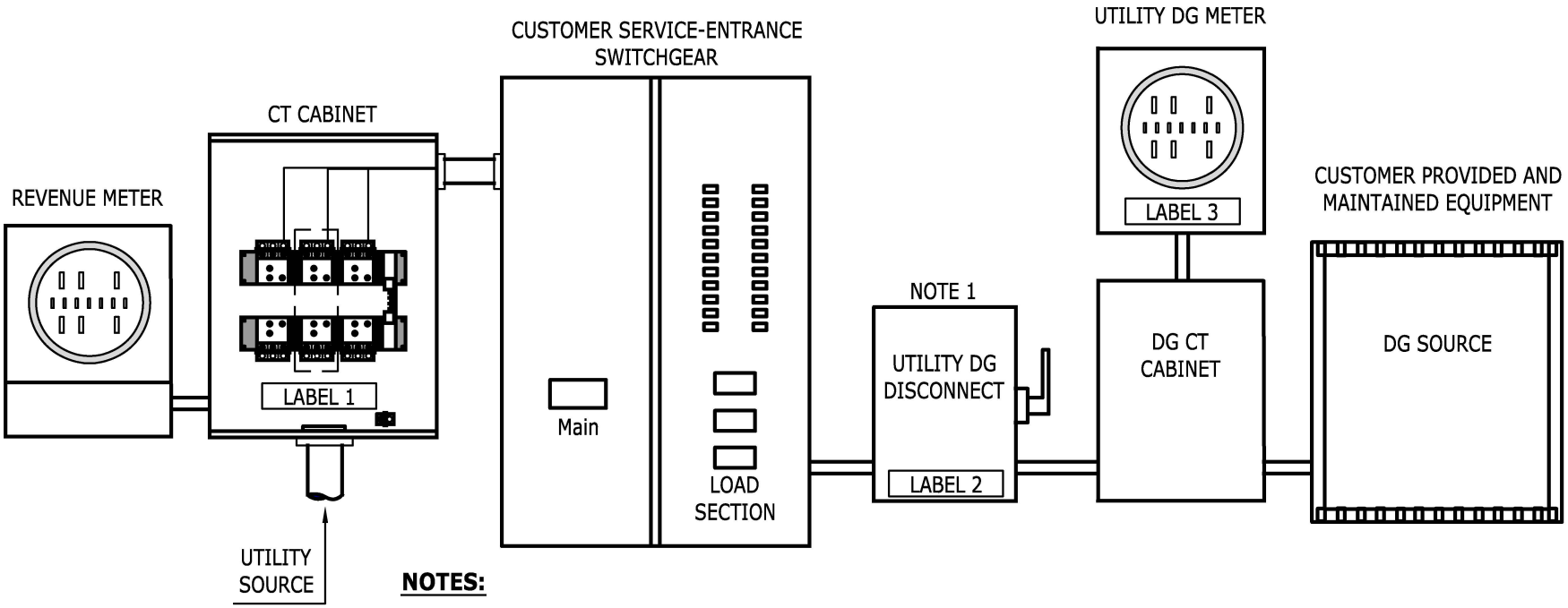

NOTES:

1. IF USING A LINE-SIDE TAP CONNECTION, DG DISCONNECT SWITCH MUST BE APPROPRIATELY FUSED.
2. CUSTOMER SHALL FURNISH AND INSTALL THE DG DISCONNECT SWITCH, DG METER SOCKET (SEE SR-452), LABELS 1-3 AND RELATED DG EQUIPMENT.
3. REVENUE AND DG METERS ARE PROVIDED AND INSTALLED BY TEP/UES.
4. A TEP/UES RENEWABLE ENERGY DEPARTMENT INSPECTION IS REQUIRED FOR APPROVAL.
5. A GOVERNMENTAL AGENCY CLEARANCE IS REQUIRED FOR ALL DG INSTALLATIONS.
6. LABELS ARE AVAILABLE FOR PURCHASE AT BORDER STATES ELECTRIC 294-1414.



LABEL 1
TUC047-W-AE-X42

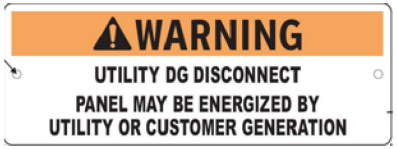

LABEL 2
TUC046-W-AE-C22

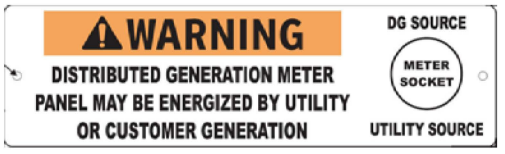

LABEL 3
TUC045-W-AE-E12

Tucson Electric Power
TEP
UniSourceEnergy SERVICES
SANTA CRUZ COUNTY

INITIATED BY	REVISION NO.
ESR COMM.	ESR COMM.
DM	EFFECTIVE DATE
9-17	-
	0
	-

SR-703
Pg. 6 of 6

FORMERLY SR-1.23, SECTION 100

800 SECTION
TELECOMMUNICATION & CATV ATTACHMENTS

TITLE	SR-No.
Riser Details, Telco/CATV	805

RISER DETAILS - TELCO/CATV

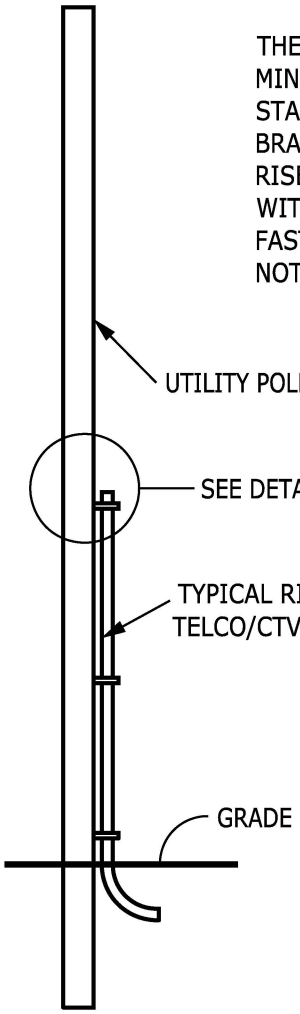

RISER INSTALLATION SEE DETAILS

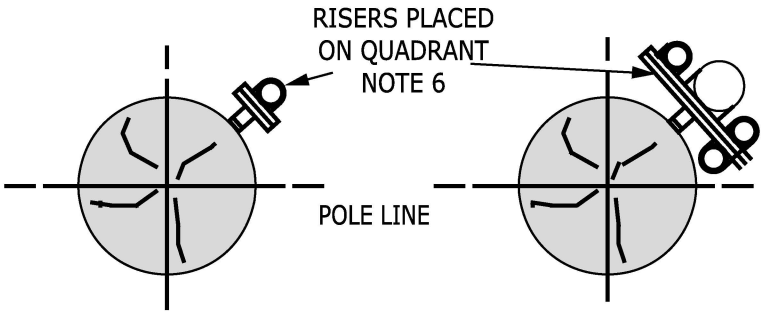

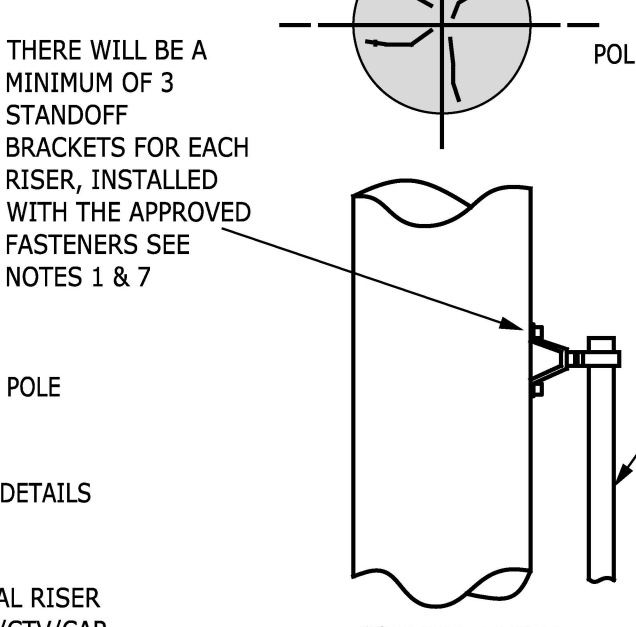

CONDUIT RISER

SINGLE COMMUNICATIONS RISER USING STANDOFF BRACKETS

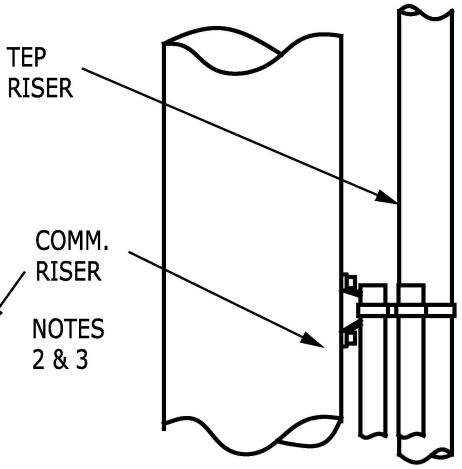

CONDUIT RISER

TEP RISER WITH UP TO THREE (3) COMMUNICATIONS RISERS

APPROVED CONDUIT BRACKETS CATALOG NUMBERS

2"	4-CSO-7/stk-2T
2.5"	4-CSO-7/stk-2.5K
4"	4-CSO-7/stk-4
6"	4-CSO-7stk-6

RISER POLE ATTACHMENT NOTES:

1. NAILS SHALL NOT BE USED FOR ATTACHMENT OF ANY TYPE OF CONDUIT RISERS. LAG SCREWS ONLY, (3/8"X3" MIN.). RIV-NUTS ON STEEL AND FIBERGLASS POLES.
2. RIGID STEEL OR ALUMINUM, IMC CONDUIT IS REQUIRED FOR RISERS WITH PROPER THREADED COUPLING. NO PVC PRODUCTS ARE ALLOWED
3. THERE SHALL BE NO MORE THAN 3 COMMUNICATIONS CONDUITS, UP TO 3" IN DIAMETER OR 2-4" CONDUITS ON ANY UTILITY POLE.
4. IF THERE IS A PRIMARY OR SECONDARY TEP RISER ON A POLE, IT SHALL NOT BE RE-POSITIONED WITHOUT TEP AUTHORITY. CONTACT DESIGN FOR CONSTRUCTION REQUIREMENTS. COMMUNICATIONS RISERS SHALL BE CLUSTERED (SEE DETAILS ABOVE) IN THE SAME QUADRANT AS THE UTILITY RISER.
5. IF THERE IS NO TEP RISER ON THE POLE, THE COMMUNICATIONS RISER SHALL BE ON THE OPPOSITE SIDE OF POLE FROM ON-COMING TRAFFIC.
6. STANDOFF BRACKETS SHALL HOLD CONDUIT 4" OFF OF WOOD POLES. ALUMA-FORM MANUFACTURES UNITS USED BY TUCSON ELECTRIC POWER CO., SEE APPROVED CAT. NUMBERS.
7. SEE SR-220, PG. 2 OF 2 FOR PROPER RISER INSTALLATION.
8. FOR POLES CONTAINING INTERNAL CABLES, RISERS OR FIBER, ONLY EXTERNAL BANDING METHODS MAY BE USED. FOR QUESTIONS ABOUT POLES WITH INTERNAL CABLES, OR TO ENSURE SUCH POLES ARE PROPERLY IDENTIFIED PER TEP SPEC EM-S31, PLEASE CONTACT TEP TELECOMMUNICATION PROJECT MANAGER AT 918-8360.

FORMERLY SR-221, SECTION 200

TEP Tucson Electric Power / UniSourceEnergy SERVICES SANTA CRUZ COUNTY	INITIATED BY	ED	REVISION NO.	0	SR-805 Pg. 1 of 1
			ESR COMM.	-	
	ESR COMM.	9-17	EFFECTIVE DATE	-	

GIS DRAWING LEGEND

TITLE	PAGE No.
Overhead	1
Single Phase Underground	2
Three Phase Underground	3

OVERHEAD MAPPING LEGEND


TEP NON-JOINT USE


TEP JOINT USE


TELCO JOINT USE


POLE REMOVAL


TOWER STRUCTURE


O.H. TRANSFORMER


O.H. OPEN DELTA BANK


3 PHASE O.H TRANSFORMER BANK


ANCHOR


ANCHOR REMOVAL


SPAN GUY

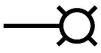
DUSK TO DAWN LIGHT


DUSK TO DAWN LIGHT REMOVAL


CAPACITOR



SWITCH CAPACITOR


FUSED CUTOUTS


INLINE DISCONNECT


UNDERSLUNG DISCONNECT


LINE RECLOSER


VOLTAGE REGULATOR



PRIMARY METERING



O.H. SERVICE 2 WIRE



O.H. SERVICE 3 WIRE



O.H. SERVICE 4 WIRE

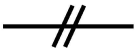
O.H. SECONDARY 2 WIRE

O.H. SECONDARY 3 WIRE


O.H. SECONDARY 4 WIRE

O.H. PRIMARY 1 PHASE

O.H. PRIMARY 2 PHASE

O.H. PRIMARY 3 PHASE


FAULT INDICATOR


PUSH BRACE ANCHOR

UNDERGROUND MAPPING LEGEND

SINGLE PHASE



SINGLE PHASE TRANSFORMER



J-1 CABINET



U.G. SECONDARY PEDESTAL



J-10 SURFACE MOUNT PEDESTAL



U.G. PRIMARY CABLE



U.G. PRIMARY CABLE IN DUCT SYSTEM

U.G. SECONDARY CABLE



U.G. SECONDARY CABLE



U.G. SERVICE CABLE



U.G. SERVICE CABLE IN DUCT SYSTEM

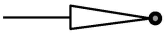

METER



4" SLEEVE



2 1/2" & 4" DUCT STUB



RISER QUADRANT



PHASING



FUSE

FORMALLY: SR-601 Page 2

TEP Tucson Electric Power / UniSourceEnergy SERVICES SANTA CRUZ COUNTY	INITIATED BY	ED	REVISION NO.	0	**LEGEND Pg. 2 of 3**
			ESR COMM.	-	
	ESR COMM.	7-17	EFFECTIVE DATE	7-17	

UNDERGROUND MAPPING LEGEND

THREE PHASE



THREE PHASE TRANSFORMER

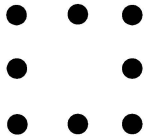
BUMPER POST



PADMOUNTED SWITCHGEAR


PHASING


PADMOUNTED SWITCHGEAR


FUSE

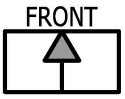

J-2 CABINET

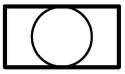
PULL BOX (W/MANHOLE)


PULL BOX (W/LID)


J-30 SURFACE MOUNT PEDESTAL


UG CAPACITOR


RISER QUADRANT



SECTIONALIZER

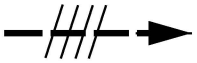
U.G. CUSTOMER OWNED 4-WIRE SERVICE

THREE PHASE U.G. PRIMARY CABLE


METER


SLEEVE


DUCT STUB

FORMALLY: SR-601 Page 3

TEP Tucson Electric Power / UniSourceEnergy SERVICES SANTA CRUZ COUNTY	INITIATED BY	ED	REVISION NO.	0	**LEGEND Pg. 3 of 3**
			ESR COMM.	-	
	ESR COMM.	7-17	EFFECTIVE DATE	7-17	